GASON®

AGRICULTURE

9 and 12 Tonne Series
Trailed Fertiliser and Lime Spreader

Tractor & Machinery Association of Australia

OPERATORS MANUAL

G/Drive & Hydraulic VRT Models

GPN 224132 **REVISION – *** **07/18**

COPYRIGHT
Neither this manual or part thereof may be reproduced or published without the prior permission of AF Gason Pty Ltd

Page Intentionally Blank

Contents

Warranty Form
Introduction…… 1
Safety……. 2
Specifications…… 4
Conversions…….. 5
Bolt Specifications…… 6
Ordering Parts…….. 7
Spare Parts Record……. 8

Assembly Instructions……. 9

Operation…….. 10
General Setup Information…….. 10
Spinner Options, Use & Fitment…… 11
Setting Spinner Speed …….. 13
WideSpread Setup …..…… 14
Discharge Opening Reference Chart …… 16
WideSpread Spinner Fin Settings…… 16
WideSpread Setup Checklist …… 18

Ground Drive Operation…….
Setting Spinner Speed……..……. 19
Determining Bulk Density …….……. 20
Changing Gearbox Ratio……. 21
Rear door Operation……. 22

Setting Application Rate Ground Drive Model…….. 23
By Rate Chart…… 23
By Calibration Process……. 24
Calibration Jockey Wheel Turns……. 26
Application Rate Record Sheet ……. 27

VRT Drive Operation ……..….
Setting Spinner Speed……..……. 28
Setting Product Density……..……. 29
Setting Rear Door Opening……..….. 29
Setting Flow Factor……..……..….. 30
Setting the Spreader Width……..….. 31
Starting the Spreader Operation…….. 32
Application Record Sheet-VRT Drive…….. 34

General Maintenance…….. 35

Trouble Shooting Section……... 37

Spare Parts……... 39

Optional Parts……... 79

Application Rate Charts…….. 99

Page Intentionally Blank

INTRODUCTION

AF Gason Pty Ltd is an Australian owned family business operating from within rural Victoria. The Gason Company has been servicing the needs of rural Australians for more than 70 years. We operate through a local dealer support network that spans the country. Gason would like to thank you for purchasing your Australian made Fertiliser Spreader, and trust that you will have many years of trouble free service.

The Gason 7390 & 7312 Spreaders are designed to carry 9.4T and 12.8T respectively. While ideal for large volumes of waste, wet or dry, the Gason spreader will spread most materials. The feed chain offers a positive method for metering light rates of urea for top dressing crops through to high rates of lime and gypsum. The spreader can also handle chicken litter and general manures.

The Ground Drive model features a fully enclosed three speed gearbox and adjustable rear door which allows for a quick change over to various products and rates. With under slung spinners and a wide door opening, material can be fed unobstructed into the high-powered spinners. The spinners are mounted on sturdy shaft & bearing housings that have been factory greased and fully sealed, reducing maintenance.

The VRT hydraulic drive model uses hydraulics to operate both the spinner circuit and feed chain circuit. A number of monitor control systems are available which will allow application rates to be adjusted from the cab of the tractor. Full variable rate application of product is also possible depending on the information created by the operator & settings on the selected monitor.

High floatation tyres offer excellent performance for these large framed spreaders and are built to handle high tonnage application causing very little compaction damage to the ground.

This manual endeavours to provide the owner with a complete understanding of the spreader's operation and the processes required to obtain the highest level of performance possible. It is suggested that the owner/operator read this manual and any other literature that has been supplied with your machine to ensure a safe and trouble free operation.

References to the left and right hand sides of the Spreader are from the rear of the machine looking forward.

Fig.1 7312 Series Fertiliser Spreader.

While every effort has been made to ensure the accuracy of the information in this manual, AF Gason Pty Ltd reserves the right to delete, change or add information without notice.

The fertiliser spreader has been designed with safety in mind. However, the equipment is only as safe as the person operating it.

Do not operate the spreader until you have read and understood this manual. If you feel you need help or advice on the operation of the Seeder, contact your local authorized Gason Dealer.

To ensure trouble free and safe operation of your spreader, it is important to carry out a daily safety check to reduce the possibility of a costly breakdown.

Items to Check Daily During Operation

1. Check all wheel nuts are tight during the first couple of days of use or after transportation (refer page 6).
2. Check tyre pressures and tyre conditions in general.
3. Ensure the safety warning decals around the spinners are in place and are legible.
4. Check all hydraulic breakaway connections are firmly engaged.
5. Check all hydraulic hoses and fittings for leaks.
6. Check main spreader feed chain and drive sprockets for wear or damage.
7. Check feed chain turns freely before operating each day or after transporting when loaded.
8. Check drawbar pin for wear.
9. Check main drive shear pins between the gearbox and drive shaft are operational.
10. Check spinners for damage and wear before operating and that they are clear of product if starting near livestock or people.

General Safety Conditions

DO NOT ride on the machine when operating.
DO NOT touch or attempt to adjust any moving parts.
DO NOT adjust hydraulic fittings while under pressure.
DO NOT remove any safety guards while the spreader is operating.

DO carry out the daily safety checks and operate the spreader in a **safety conscious** manner.

Hydraulics

Before working on the hydraulic system always check that the spinners **are not** operating, and that there is no pressure in the hydraulic system.

Never attempt to disconnect a breakaway coupling if the spinners are operating. Turn the **tractor off** if working on the spinners or gearbox lift cylinder of the spreader.

Leaving the Spreader Unattended

Ensure that the drop leg on the jack is correctly pinned into position and that the foot is on firm ground.

Chock the spreaders wheels to prevent it from rolling if on a slope.

When Working on the Spreader

Place suitable stands under the trailer if removing a wheel or carrying out major work.

Wear safety glasses if observing the spreader while the spinners are operating.

Transporting

Never transport the Ground Drive spreader with the jockey wheel in contact with the ground wheel. Use the transport lock on the rear of the spreader to lock the gearbox in the transport position.

Fig.2 Transport lock for gearbox on G/Drive.

Before towing on the road you should consult with the appropriate state or local authority for any specific regulations and permits that may be required, for example dimension, weight, time of day and bridge restrictions, area category etc.

Do Not transport the spreader on public roads when loaded. **Do Not** exceed 25km/h when towing the spreader when loaded on private roads. Maximum speed for towing an empty spreader is 40km/h.

Always shift into low gear when travelling down steep slopes. Always be aware that the braking distance of the towing vehicle will be increased when the Spreader is attached.

DO NOT TOW:

- Without the gearbox transport lock engaged on G/drive model.
- Reverse the spreader with the gearbox jockey wheel in contact with the tyre on the G/Drive model. Damage will occur to the feed chain.
- At speed over rough ground.
- With any person or persons riding on the machine.
- On the road unless an oversize sign is fitted if wider than 2.5 metres.
- On the road at night unless rear tail lights are fitted and it is legal to do so in your state.
- In a dangerous manner that may threaten the safety of any person.
- With the bin loaded on public roads.

Fig.3 7312 Spreader with rear tail light kit and oversize decal.

.

SPECIFICATIONS

Dimensions	***7390***	***7312***
Overall width (2m ctrs)*	2750	2850mm
Overall width (3m ctrs)*	3650	3750mm
Bin width	2355	2355mm
Overall height*	2620	2920mm
Side of bin height*	2480	2780mm
Overall length**+**	6700	6700mm
Bin length	4000	4000mm
Wheel centres (2m)❖	2020	2080mm
Wheel centres (3m)❖	2920	2980mm
Front Step height	540	540mm
Ground Clearance (rear)	520	520mm
Spinner height to ground	1000	1000mm

*Heights & width measured with 450mm under front hitch, std wheel equipment & no tarp kit fitted.
❖Row Crop wheel option set at exactly 2m & 3m ctr's.
❖MultiSet axle/wheel option set at 2.2m & 3m ctr's.
+ Add 195 mm to overall length if L/Cells are fitted.

Spreader Weight

Unloaded	2800	3,000kg
Max. Loaded Weight (gross) @ 25 km/h	12,240	15,830kg
Unloaded Weight on Hitch	620	650
Loaded Weight on Hitch	2,800	3,580

Bin Capacity

By volume:

Bin shape	7,870	10,690 Lt

By weight:

Urea (estimated)	5,900	8,010kg
Super (estimated)	9,440	12,830kg

(urea @ 750kg/1000 litres
(single super @ 1200kg/1000 litres)

Wheels

Size:

Rear tyres	650/65-30.5	750/60-30.5

Type:

Rear Tyres	Floatation I-3

Tyre	**Recommended Pressure**	
	kPa	psi
650/65-30.5 (Floatation)	193	28
750/60-30.5 (Floatation)	193	28
480/80R34 (row crop opt.)	320	46

A.F. Gason P/L reserves the right to make changes to the specifications listed where required to suit production or product availability.

Spinner Hydraulics

Spinner Motor type . fixed displacement
..... Gerotor Type
Connections.....½" pressure inlet/main return
Hydraulic capacity...51 l/min. @ 850rpm (spinner)

Spinner Speed Control on Spreader….
G/Drive.....pressure compensated flow control valve.

VRT Hyd. Drive.....Proportional valve with manual overide.
Connections.....½" pressure inlet/main return x 2 sets.
Hydraulic capacity...110 l/min. max.combined
.....59 l/min. @ 28rpm (feed chain) + spinner flow

Typical motor Pressure (Spinner circuit)
Pressure (cont.) .....124 Bar (1800 psi)
Pressure (max.). .....193 Bar (2800 psi)

Typical motor Pressure (Feed Chain VRT)
Pressure (cont.) .....83 Bar (1200 psi)
Pressure (max.). .....193 Bar (2800 psi)

Maximum return
line oil temp .....90° C max.

Hydraulic fluid .....Mobil fluid 424 or equivalent High quality High VI multigrade transmission and hydrostatic tractor oil.

Ground Drive Feed Chain System
Gearbox..... 3 speed
Type ..... Chain & Sprocket
Sprockets..... Steel
Lubrication ..... Mobil HP grease
..... (general purpose)

VRT Hyd. Drive Feed Chain System
Gearbox ..... H/Duty Reduction
Gearbox Oil Grade..... SAE 90 EP
Gearbox Oil Volume ..... 3.1 litres
Hydraulic Motor ..... 100cc capacity
Manual Override ..... Standard Feature

Useful Conversions – Formulae

LENGTH:	1 km	= 0.621371 mile	1 mile	= 1.609344 km
	1 m	= 3.280840 ft.	1 ft	= 0.304800 m
	1 mm	= 0.039390 inch	1 inch	= 25.400 mm
SPEED:	1km/h	= 0.625 mph		
AREA:	1 ha	= 10,000 m^2 = 2.471054 acres		
	1 acre	= 10 sq. chain = 4840 sq. yd. = 0.404685ha		
		= 4840 sq yd. = 0.404685 ha		
	1 km^2	= 0.386102 sq. mile	1 sq. mile	= 2.589988 km^2
VOLUME:	1 m^3	= 35.31476 cu. Ft.	1 cu. ft.	= 0.028317 m^3
	1 L	= 0.26418 US gal gal.	1 US gal.	= 3.78531 L
	1 UK gal = 1.201 US gal.			
	1 UK Bushel = 8.00 UK gal. = 1.2843 cu.Ft			
	1 L	= 0.0274962 UK Bushel	1 UK Bushel = 36.369 L	
	1 L	= 0.0283785 US Bushels	1 US Bushel = 35.2379 L	
TORQUE:	1 Nm	= 0.7375624 lbft.	1 lbft.	= 1.3558175 Nm
FORCE:	1 lbf	= 4.4482 N	1N	= 0.22481 lbf
PRESSURE:	1 psi	= 6.89476 kPa	= 0.0689476 Bar	
	1 kPa	= 0.145038 psi	= 0.01 Bar	
	1 Bar	= 14.5 psi		
MASS:	1 kg	= 2.204622 lb	1 lb	= 0.453592 kg
	1 kg	= 1000 grams		
POWER:	1 kW	= 1.341 hp	1 hp	= 745.7 W
DENSITY:	1 kg/m^3	= 0.0624 lb/ft^3	1 lb/ft^3	= 16.0185 kg/m^3
APPLICATION RATE:	1 kg/ha	= 0.892 lb/acre	1 lb/acre	= 1.121 kg/ha

HYDRAULIC HORSE POWER:

$$1\ hp = \frac{FLOW\ (US\ GPM) \times PRESSURE\ (psi)}{1714}$$

MASS FLOW RATE:

$$kg/min = \frac{Application\ Rate\ (kg/ha) \times Area\ Rate\ (ha/hour)}{60}$$

$$lb/min = \frac{Application\ Rate\ (lb/acre) \times Acre\ Rate\ (acre/hour)}{60}$$

STANDARD BOLT HEAD MARKINGS AND TORQUE SPECIFICATIONS:

CAUTION: Loose bolts can cause elongation of holes and part failures resulting in dangerous operating conditions and equipment breakdown. Check all bolts and nuts periodically during equipment operation and keep them tightened to the specified torque. If hardware replacement becomes necessary, replace with equivalent metric grade number.

NOTE: The following torque figures are those recommended for zinc plated, lightly oiled bolts. Recommended assembly torques may be obtained by multiplying the torque figures in the table below by:

0.78 – for degreased zinc plated bolts
1.10 – for black oxide finished bolts
0.81 – for M20x2.5P Tine Toolbar Hardware

It is necessary that all bolts be tightened to the correct recommended assembly torque.

Size	Thread Pitch	Recommended Assembly Torque					
		lbf.ft	Nm	lbf.ft	Nm	lbf.ft	Nm
S.A.E Grade Number		**5**		**8**		**Wheel Stud**	
Head Markings (Manufacturers marks may vary)		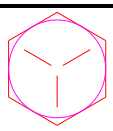		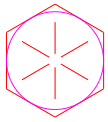			
7/16	UNF	43	59	60	82	-	-
7/16	UNC	39	53	54	74	-	-
1/2	UNF	67	91	94	128	-	-
1/2	UNC	59	81	83	113	-	-
5/8	UNF	135	184	186	253	-	-
5/8	UNC	117	159	165	224	-	-
3/4	UNF	235	319	325	441	-	-
3/4	UNC	210	285	290	394	-	-
7/8	UNF	370	502	520	706	-	-
7/8	UNC	335	455	470	638	-	-
1	UNF	550	746	775	1052	-	-
1	UNC	505	685	710	963	-	-

Metric Grade Number		8.8		10.9		Wheel Stud	
Head Markings (Manufacturers marks may vary)				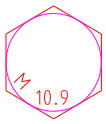			
M10	1.5	29	40	41	56	-	-
M12	1.75	51	70	73	100	-	-
M16	-	-	-	-	-	170	231
M16	2.0	126	171	180	245	-	-
M18	-	-	-	-	-	243	330
M20	-	-	-	-	-	265	360
M20	2.5	247	335	351	477	-	-
M22	-	-	-	-	-	340	462
M24	-	-	-	-	-	370	502
M24	3.0	425	577	608	825	-	-

ORDERING PARTS

When Ordering Parts:

The following information must be supplied to facilitate fast and accurate processing of a replacement parts order:-

- Gason part number and description (as given in this manual)
- Quantity
- Machine model and serial number
- Method of despatch.
- Your Dealers name and address

For your convenience record the following information below:

Name: _____

_____

Address:_____

_____

Telephone Number:_____

Machine Model No: _____

Date Machine Purchased: _____

Serial No.: _____

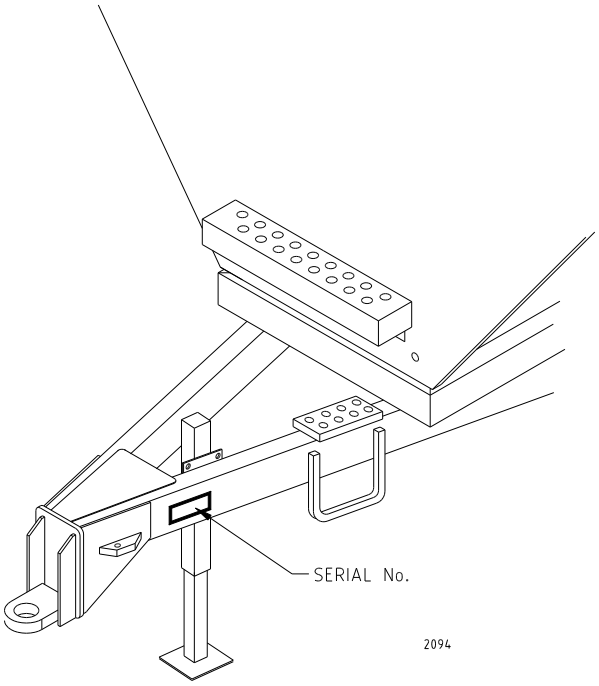

Subject to any applicable Federal, State or Territory laws or ordinances, which may apply from time to time, AF Gason Pty Ltd reserves the right to make changes in design and specifications without notice or obligation and to change or discontinue models at any time without incurring any liability to any Purchaser thereof.

Left and right hand: All references in this manual are determined by facing the direction of travel.

For warranty provisions please consult your Installation and Warranty Registration document.

Ordering Parts

PART No.	DESCRIPTION	QTY.	COST	DATE

Introduction

The fertiliser spreader has been assembled as far as practicable at the factory to minimize the amount of work required in the field. The unit has been inspected and tested before it leaves the factory and requires only a few basic checks before it is commissioned.

Lifting the Spreader

The Spreader has been supplied with 4 lifting points located at each corner at the top of the bin. Use appropriate lifting chains or shackles and slings. Ensure that the spreader is empty before attempting to lift the spreader.

Spreader weight unloaded (wheels fitted)

7390 model	2800kg approx.
7312 model	3000kg approx.

Fig.4 Tarp kit fitted to a 7390 model.

Final Pre-Delivery Check List

After the Spreader has been assembled, a final check should be carried out before delivery.

Trailer General:-

1. All wheel nuts tight.
2. Safety hitch chain has been fitted.
3. Check tyre pressures.
4. Bin clean on inside, no loose items.
5. Spinner tacho is working on G/Drive model.
6. Tarp Kit if fitted is secure & operational.

Hydraulic Connections

The hydraulic system has been tested prior to dispatch from the factory.

Poppet style standard 1/2'" breakaway connectors have been fitted to the spreader hoses to suit most modern tractors.

G/Drive Spreaders:-

When connecting to the tractor, place the smaller diameter hose in the supply (pressure) remote outlet on the tractor. The larger hose should then be connected to the return flow remote. The spinner speed can be controlled from the tractor if equipped with closed centre hydraulics (adjustable oil flow).

VRT Drive Spreaders:-

The VRT Spreaders have 2 sets of hoses that will require connection to 2 hydraulic remote circuits on the tractor. Tags on the hoses will identify them as “Spinner” or “Feed Chain” hoses. A red sleeve has been fitted to the pressure hose for each of these circuits.

Once connected to the tractor, it is possible to test the hydraulic circuit using the manual override knobs on the hydraulic valve block located on the RHS of the spreader and protected by a cover panel. Undo the valve cap and screw the red knurled knob clockwise several turns to open the valve (refer Fig.5).

The operator will need to set the flow of oil from the tractor to approximately 40-60lpm for each circuit to obtain full operation speed. This can be reduced if operating the spreader at lower spinner & feed chain speeds.

Fig.5 Manual Override Valve on the VRT model.

General Information

Before operating the spreader, check that the machine is in good working order.

- Tyres should be in good condition and inflated to the correct pressure.
- All feed chain bushes and bearings have been greased. Feed chain turns freely.
- Grease gearbox on G/drive model before using. Ensure that the gear selector pin has been fully pushed in before greasing the nipple at the end of the pin.
- Spreader trailer frame sits slightly lower at front when attached to the tractor.
- All 4 drive bolts are in place and are the correct type. ***Note: Do not over tighten***.

Fig.6 Feed chain shaft drive bolts in place. Replacement Drive Bolt Kits can be ordered under part number 234105.

Adjustments Required for Different Products

The spreader requires minimal changes to spread a variety of products. Before placing the product in the bin, refer to the following text to determine any settings or changes that might be required to spread your product.

Feed Chain Cover Plate

Feed chain cover plates (qty 2), are provided to protect the feed chain and reduce chain loading when using free flowing granulated fertiliser at low door settings.

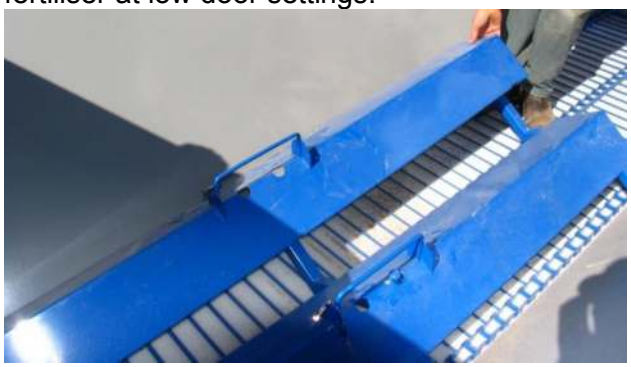

Fig.7 Feed chain cover plates.

WideSpread Centre Vee

The second item that may also need fitting or removal is the centre vee at the rear of the spreader that directs product towards the centre of the spinners.

Fig.8 WideSpread Centre vee removed in discharge area.

Refer to Table 9 for suggested fitment or removal of cover plates, WideSpread Centre Vee and spinner type.

Product Type	Product Example	Feed chain covers	WideSpread Centre vee	Spinner Type
Granulated	Urea, MAP, Super	Fitted	Fitted	WideSpread
Non-free flowing heavy	Lime, Gypsum	Removed	Removed	General Purpose
Free flowing heavy	Lime Sand	Fitted	Removed	General Purpose
Manures	Chicken litter, etc.	Removed	Removed	G/P or H/Duty Option

Table 9.

Spinners Supplied with the Spreader

The 9 & 12T WideSpread spreader comes with two sets of spinners. Both are needed to allow the machine to achieve the 36 metre spread width for pelletised products, and then to perform well with non-free flowing products like Lime and manures.

General Purpose 4 fin Spinners

Can be used on almost all products. Excellent for Gypsum & Lime and will spread pelletised fertiliser to 24 metres or greater depending on type.

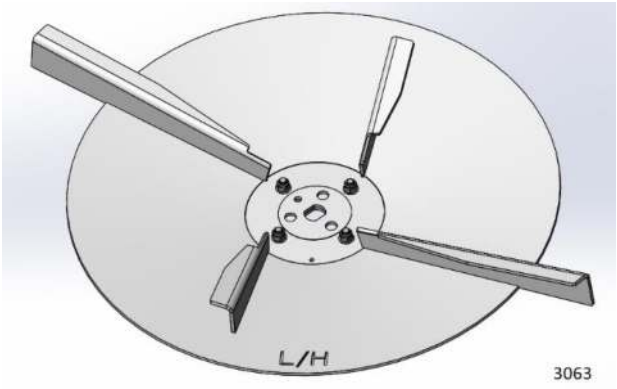

Fig.10 Four fixed fins on the General Purpose disc's

WideSpread 2 fin Spinners

When spreading pelletised fertiliser to 36 metres, it will be necessary to have the WideSpread Spinner Disc's fitted as well as the Widespread Centre Vee. The WideSpread spinner disc's can be identified by their 2 fin configuration.

Fig.11 Two Fin WideSpread Spinner Disc

Changing the Spinners

The spinner disc's are handed, and have identification marks. Left and right hand are viewed from the back of the machine looking forward.

To change the spinners, you will need a 36mm spanner or medium length shifter. The thread on both spinners shafts are a standard right hand thread. The spinner is retained by a single M24 nyloc nut that is located below the spinner.

The nut should be replaced if the nylon no longer resists when screwing it onto the thread (10 to 20 uses). A spare set of M24 nyloc nuts are supplied with the machine when it leaves the factory.

Note: Do not over tighten the nut.
Maximum torque:- 50N/m

Fig.12 Using a spanner to undo the M24 nuts while holding a long fin to prevent it from turning.

There is a rest bracket on the trailer frame to aid the removal and re-assembly of the spinners. If the nut is loosened several turns, and the spinner edge supported by one hand, the front of the disc will rest on the bracket making it easier to remove the nut and flat washer before lowering the disc away from the drive shaft.

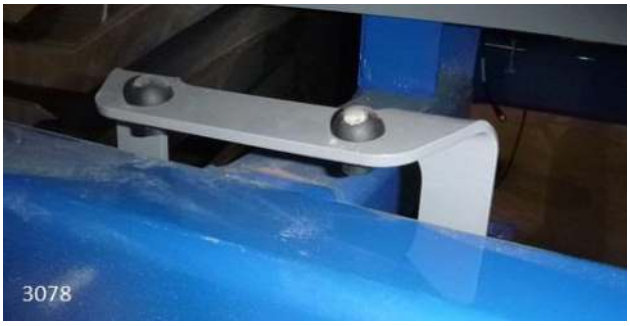

Fig.13 Rest for Disc to aid fitment & removal.

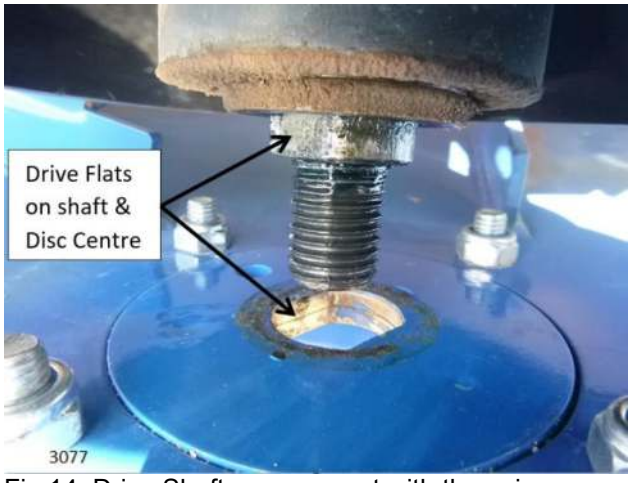

Fig.14 Drive Shaft engagement with the spinner.

When fitting the replacement disc, make sure that the 'Drive Flats' on the Drive Shaft line up with the corresponding shape in the centre of the disc.

The easiest way to do this is to rest the disk onto the support bracket with the disc at an angle to clear the drive shaft. Then, with one hand lift the free end of the disc up over the thread. Fit the flat washer & nyloc nut. Screw the nut up by hand sufficiently to bring the centre plate close to the Drive Flats on the shaft. By rocking and turning the disc at the same time, the flats should align between the two parts and the nut can be used to lift the spinner into place. Once engaged, use the spanner to secure the disc in position.

Do not over tighten the nut. Do not use an impact driver to tighten the nut. Maximum torque required:- 50N/m.

Rubber Boot Deflector

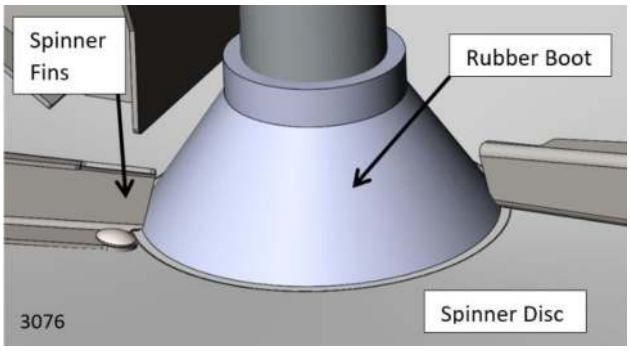

Fig.15a Rubber Boot to sit down on spinner.

During fitment, make sure that the Rubber Boot is not being forced up by the fins and that the boot sits on top of the spinner disc.

Fig. 15b Rubber boot being squeezed to fit past the fins. Rotate the boot when moving it up or down into position. This should make it easier to move.

Rear Door Opening

To set the rear door, remove the clip from the adjusting handle and rotate to raise or lower the door to the required position using the radial decal as an indicator.

Minimum door opening for light pelletised products like urea is 40mm. This is to ensure that the drive mechanism is not overloaded during operation. Products like MAP, DAP, Potash or Super's will require a minimum door height of 75mm. If the door height is set too low for hard pelletised products, the drive mechanism could jam and potentially break the drive bolts. Refer page 10 for drive bolts replacement.

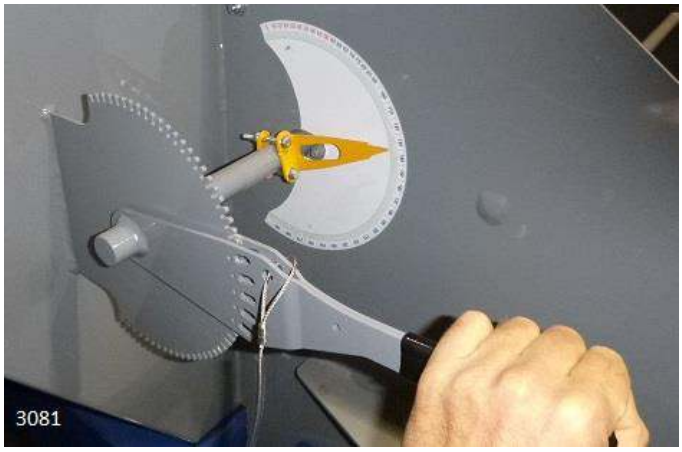

Fig.16 Rear Door Adjustment.

To determine what the correct door setting should be, for Ground Drive models refer to the Rate Charts at the rear of the manual and the Setting Application Rates section starting on page 23. For Hydraulic Drive VRT spreader models refer to Table 51 on page 30.

Suggested Spinner Speeds

General Purpose Spinner

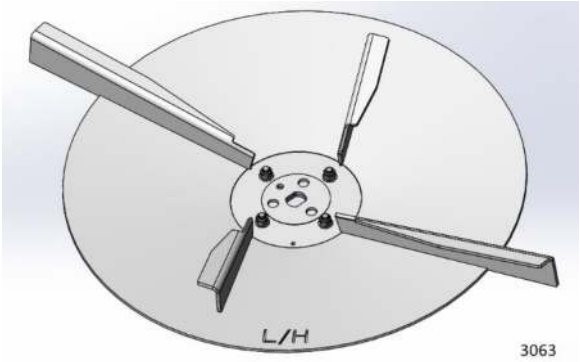

Standard General Purpose 5mm x 4 fin Spinners for almost all products including granular products to 30 metres.

Product	**Type**	**Spinner Speed (rpm)** Approx.	**Bout Width (m)** Approx.
Urea	Granular	700 - 780	16 - 28
MAP / DAP	Granular	700 - 780	18 - 28
Super	Granular	700 - 780	20 - 30
Lime / Gypsum	**Loose -** Non free flowing	**650 - 700**	**6 – 16**
Manure	Varies	650 - 700	N/A

Table 17 Note: Maximum spinner speed for the 675mm disc / 890mm fins is 820rpm.

WideSpread Spinner

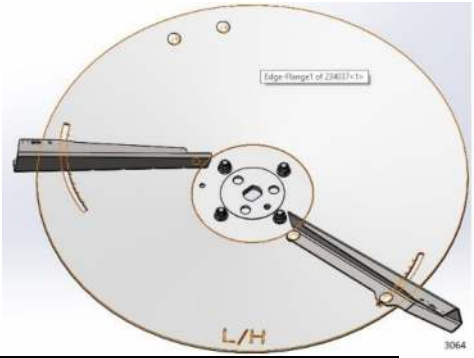

WideSpread Non-Symmetrical 2 Fin Spinners for Granular product to 36m

Product	**Type**	**Spinner Speed (rpm)** Approx.	**Bout Width (m)** Approx.
Urea	Granulated	730	16 - 28
Urea	**Granulated**	**780**	**28 - 36**
MAP / DAP	Granular	650 - 750	18 - 36
Super	Granular	650 - 750	20 - 36

Table 18

Note: Maximum spinner speed for the 2 Fin 675mm disc / 890mm fins is 820rpm.

WideSpread Spreader Setup

When spreading pelletised fertiliser to 36 metres, it will be necessary to have the WideSpread Spinner Disc's fitted as well as the Widespread Centre Vee. The WideSpread spinner disc's can be identified by their 2 fin configuration.

The spinner disc's are handed, and have identification marks. Left and right hand are viewed from the back of the machine looking forward (refer Fig.19).

The WideSpread spinners have adjustable fins which allow for fine tuning to achieve the best spread pattern possible for a particular product.

In most cases, no adjustment will be necessary. The recommended factory setting for the fins will spread urea and most pelletised fertilisers to 36 metres.

.

Note: Product quality and weather conditions will have an impact on the machines ability to spread to wide widths. It is important that the operator assesses these variables before determining the appropriate settings required.

When spreading pelletised fertiliser to 36 metres, it will be necessary to check the fin setting on the disc as well as the discharge opening on the WideSpread Centre Vee that will control the product flow onto the disc

The discharge opening is the left and right rectangular opening at the bottom of the Widespread Ctr Vee. If the opening is not large enough when doing high rates of product, generally above 150kg/ha of urea, material can be restricted and choke the spinner from receiving the full amount of product to be spread.

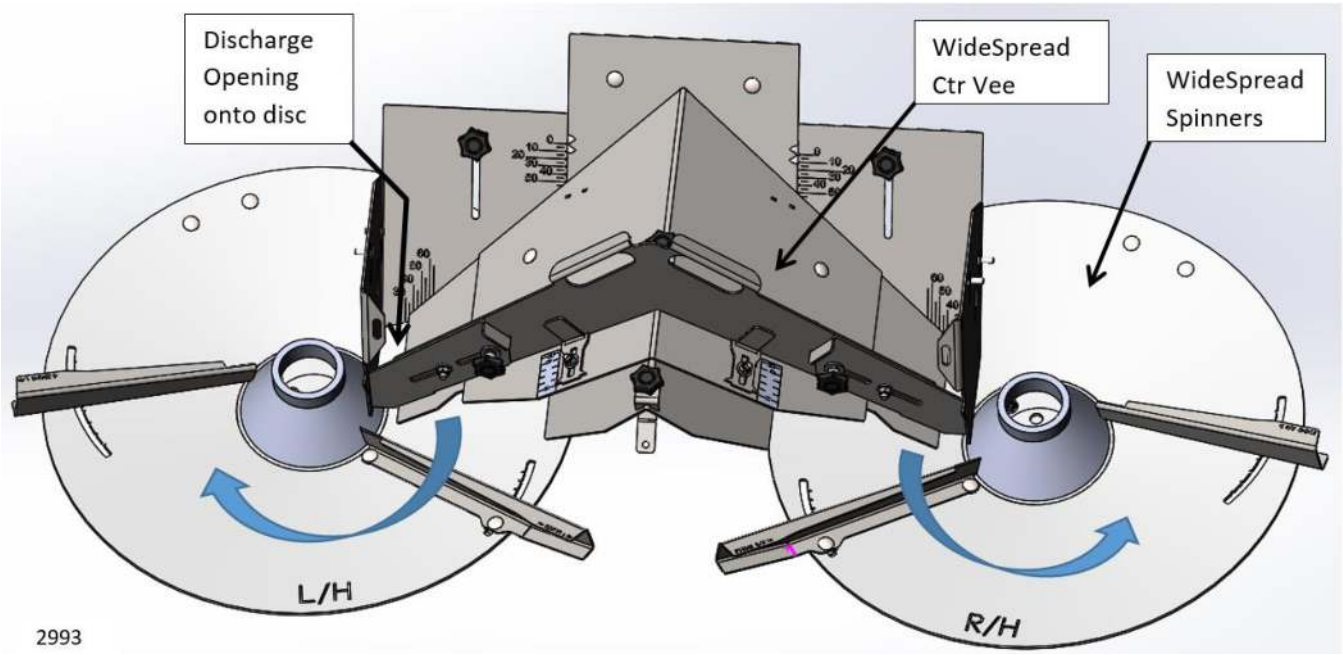

Fig.19 Shows the Spreader's discharge area at the rear of the spreader looking forward. WideSpread Spinners fitted for spreading pelletised fertiliser to wide widths

.

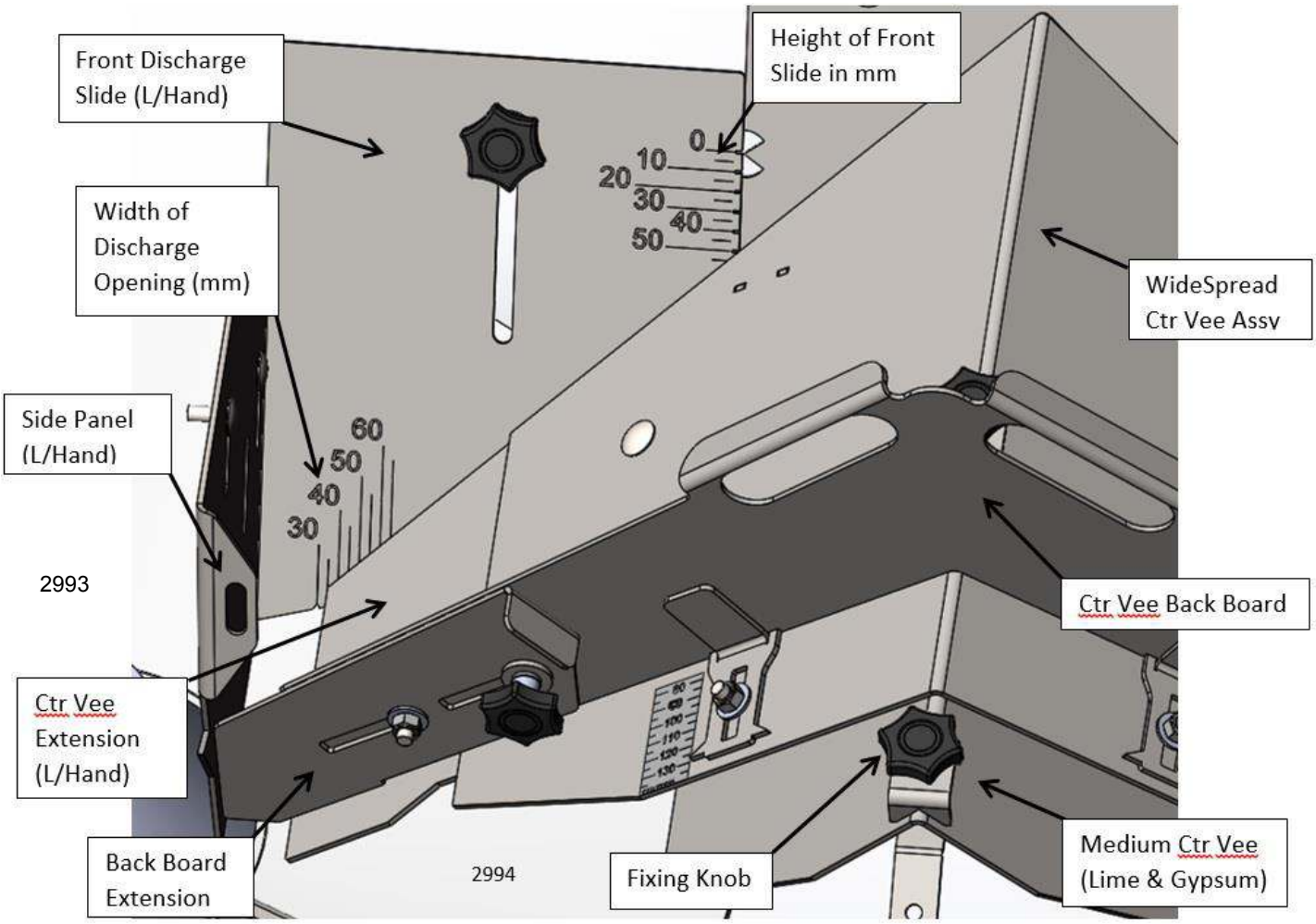

Fig.20 WideSpread Ctr Vee & panels for changing settings

It is important that both the left and right discharge settings are the same. Uneven distribution may occur if the flow of product onto the spinners is different one side to the other.

Refer to Fig.20 for a list of names used to identify the various panels and Table 22 for the appropriate settings. In most cases, the only setting in this area to be checked or moved will be the 'Width of Discharge Opening'. Vertical etched lines on the 'Front Discharge Slide' (refer Fig.21) show the opening size in mm to the 'Side Panel'.

To change the opening width, slacken the rear nut on the 'Ctr Vee Extension' plate & slide it up or down as required. Lock it up once set.

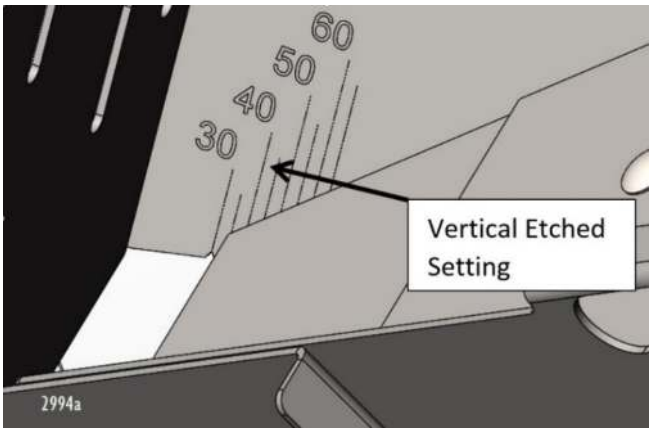

Fig.21 Vertical etched lines on Front Discharge Slide showing the Ctr Vee Extension set to 35mm opening

.Product	Bulk Density (kg/L)	Width of Spread (m)	Applic.Rate (kg/ha)	Ground Speed (km/h)	Width of Discharge Opening (mm)	Depth of Discharge Opening (mm)
Urea	0.75	24	40-200	20	35	130
Urea	0.75	36	40-100	20	35	130
Urea	0.75	36	100-150	20	40	130
Urea	0.75	36	150-300	20	60	130
Potash/MAP	1.0	36	50-180	20	35	130
Potash/MAP	1.0	36	180-300	20	45	130

Table 22 Showing the Discharge Opening position on the WideSpread Ctr Vee

Fin Position on the WideSpread Spinners

For most products, there will be no need to modify the factory set position of the long and medium length fins. However, if spreading poor quality product, or if you wish to detune the width of spread (reduce the width), having adjustable fins can be very useful.

If making an adjustment, both the left and right spinners should have the same settings. A 13mm ring spanner will be required to loosen the nyloc nuts on the bottom of the spinners.

The toe of the fin will need to line up with a corresponding mark on the disc. Refer to Table 24 and Fig.25 for the appropriate fin position.

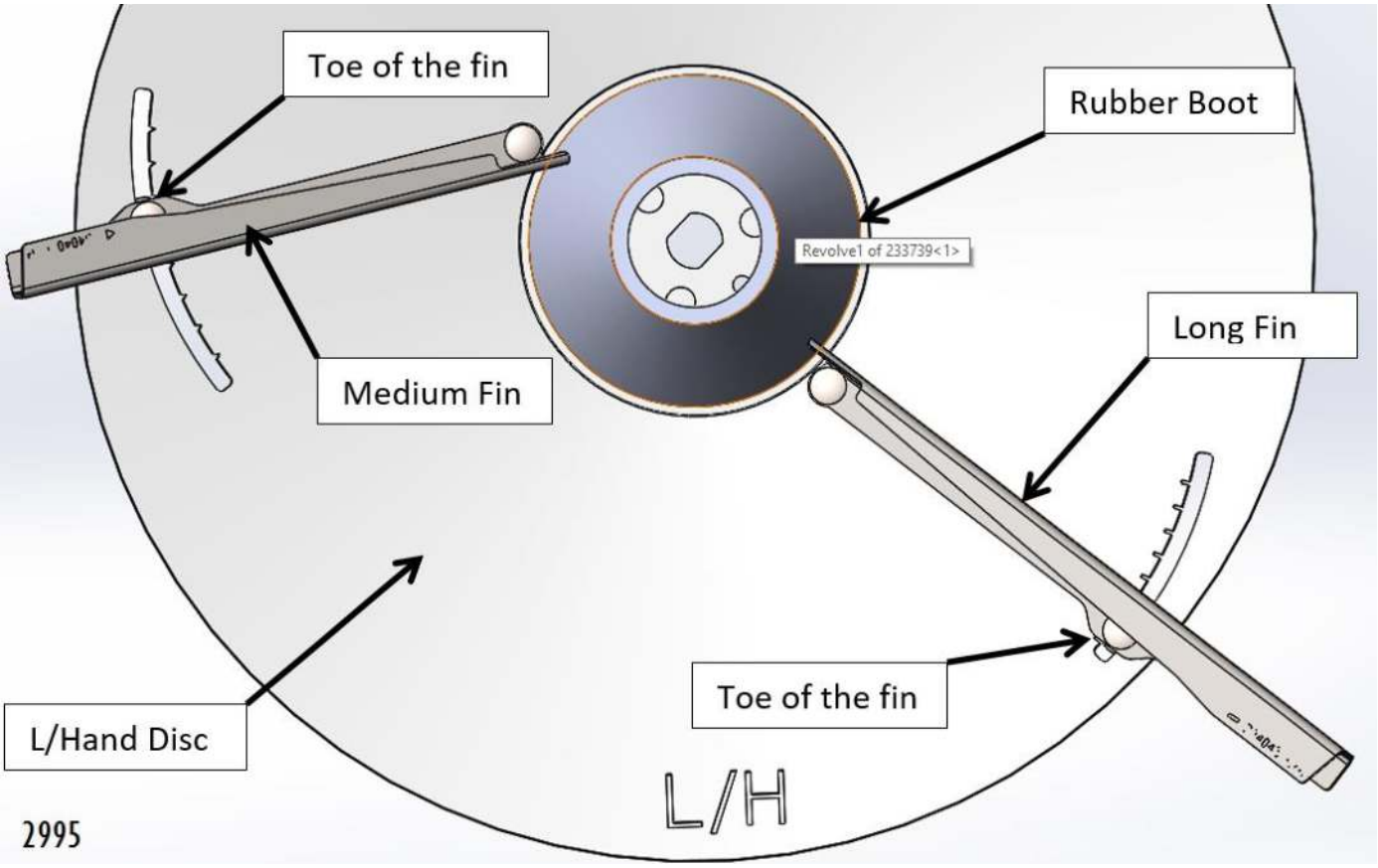

Fig.23 WideSpread 2 Fin Spinner Disc with adjustable fins. L/Hand Disc shown

The standard Factory Setting *(FS) fin position is:-*

Medium Fin position C
Long Fin position 1

Figure 25 shows the fins on the left hand spinner in this position. If in doubt at where the best fin setting position is for a particular pelletised product, set them to the Factory Position (FS).

Warning! The tractor must be turned off before working on the spinners. Spinners could turn at any time.

Recommended Fin Settings

Product	Width of spread (m)	Long Fin	Medium Fin
Urea (FS)	36	1	C
Urea	24	8	C
Urea	28	6	C
Potash	36	4	C
MAP	36	4	C

Table 24 Fin Position on WideSpread Spinners

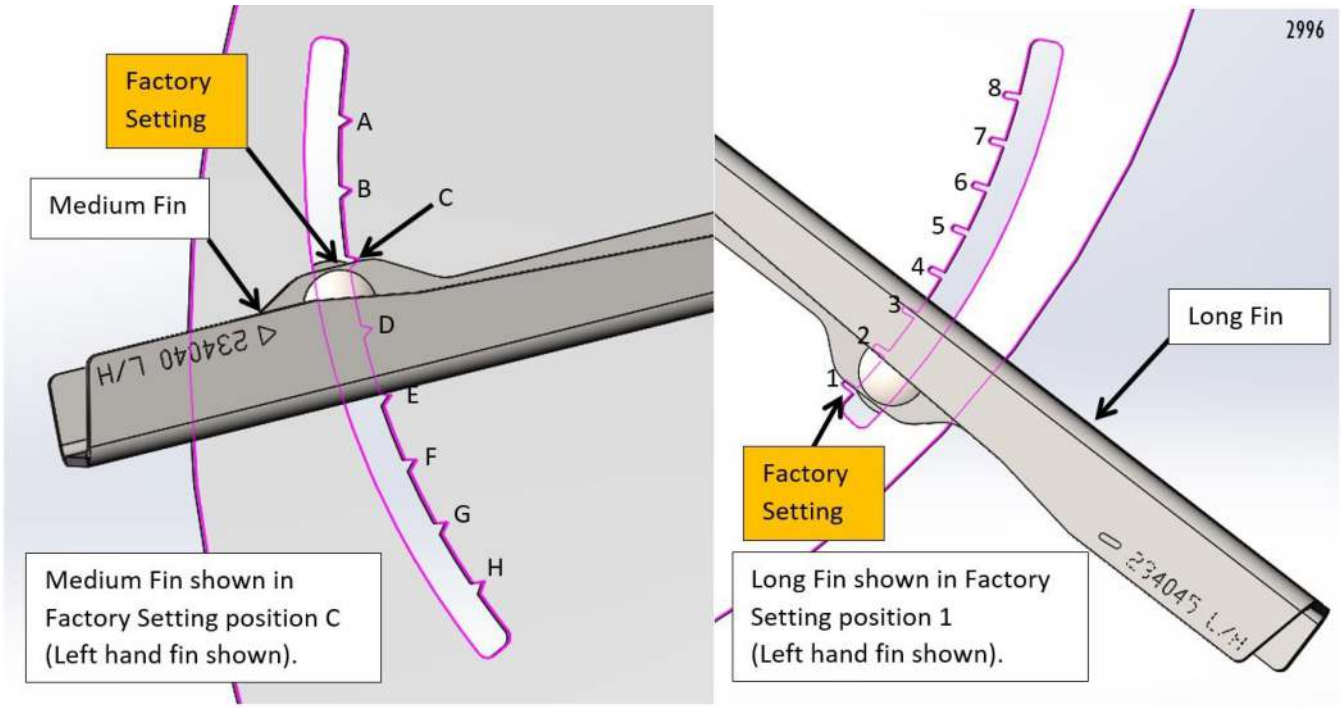

Fig.25 WideSpread Disc Fin Setting Identification Letters & Numbers

Other WideSpread Panels Explained

The **Ctr Vee Back Board** can remain in its Factory Setting of 130mm in most situations. Adjustment forward may be necessary for extremely light rates or to narrow the spread width.

The **Back Board Extension** panel on the Ctr Vee should be fully extended to minimise the gap between the Side Panels and the Back Board. Excessive gap may compromise accuracy of spread pattern.

The **Front Discharge Slide** will be set to 0mm in most situations. The only reason to alter this would be if the spinner fins hit the slide and it is needed to be raised slightly to clear.

The **Side Panel** will normally be set level with the bottom of the Front Discharge Slide. Again the only reason to raise this if a fin is too close to the panel.

Checklist for WideSpread Setup

As a final check to make sure all adjustments have been made to the spreader to achieve the 36m spread width, it is suggested you follow the list that follows.

1. Feed Chain Covers fitted. ☐
2. WideSpread Ctr Vee fitted. ☐
3. Discharge opening set for product rate. ☐
4. WideSpread spinners fitted. ☐
5. Fin settings are set (1/C factory setting). ☐
6. Spinner speed set. ☐
7. Rear door opening set. ☐
8. Calibration process completed. ☐

Note: It is important that both the left and right discharge settings are the same. Uneven distribution may occur if the flow of product onto the spinners is different one side to the other.

Fig.26 Spreading lime using the General Purpose spinners.

Spreading Rough Compost Materials

The Gason spreader can handle almost any product you might like to spread. Even rough compost products that may be contaminated with stones or small hard objects. Gason's recommend the fitment of Heavy Duty Spinners when dealing with rough products. These discs have been specifically designed to handle contaminated material. The standard General Purpose Spinners have a higher fin and will be damaged if rocks are run through them.

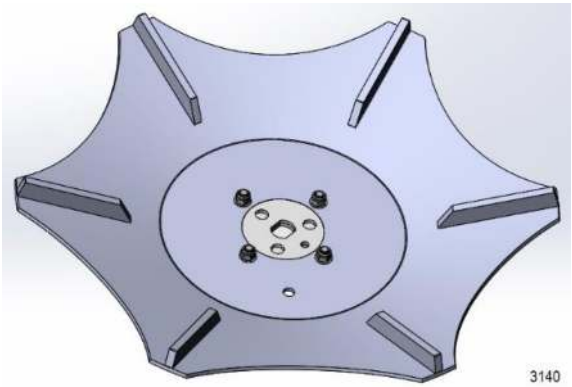

Fig. 26A Heavy Duty Spinner disc.

Ground Drive Operation

This section will explain the process of setting up and calibrating a Ground Drive spreader once the correct spinners have been fitted and adjustments made.

Setting Spinner Speed

Spinner speed is one of the most important factors in achieving an accurate spread pattern. The spinner speed can be adjusted from the cab on most modern tractors if equipped with closed centre hydraulics, or from the front of the spreader by using the flow control valve on open centre hydraulic equipped tractors.

Refer page 13 for a guideline of suggested spinner speeds for various products. Every product will spread differently depending on its bulk density, granule size, variation in size and shape.

An incorrectly set spinner speed can influence the spread pattern. By adjusting the spinner speed by as little as 50rpm up or down, it is possible to improve or alter spread pattern.

Fig.27 Speed control from spreader. Normally set to fully open position for closed centre equipped tractors.

For this reason it is suggested that a spread pattern test be carried out if maximum accuracy is required.

As a guide, if the spinner speed is too high there will be too much material directly behind the spreader. If the spinner speed is too slow there will be too little material directly behind the spreader.

Maximum spinner speed for spinners is 820rpm.

Fig.28 Tachometer at front of spreader.

Engaging the Jockey Wheel

To operate the feed chain the jockey wheel must be in contact with the ground wheel. A hydraulic cylinder is used to raise and lower the gearbox/jockey wheel. Before operating the spreader in the field, check that the transport lock has been pulled out and rotated from the link arm.

Fig.29 Transport lock for gearbox.

Once link is free to move, the gearbox / jockey wheel can be lowered by engaging the hydraulically driven spinners from the cab of the tractor.

To disengage the feed chain lift the gearbox / jockey wheel by reversing the flow at the tractor's controls. This will stop oil flow to the spinners and raise the gearbox in one operation.

Use the transport lock if travelling between paddocks or across roads.

Setting Application Rates

The application rate is controlled by:

1. The spread width of the product.
2. The bulk density of the product.
3. The gearbox ratio selected to run the feed chain.
4. The rear door height setting.

Spreading Width

The maximum spread width, or bout width for various products is determined by a material's bulk density, granule size and granule shape. Some material will spread to wide widths, such as granulated single super, while lime and gypsum will only be capable of spreading to a narrow width.

Refer to the table 17 & 18 on page 13 for approximate spread widths for various products.

Fig.30 Bout width accuracy test.

To confirm the width for the actual product being spread it will be necessary to field-test the specific product and spreader being used.

This process, if done correctly, involves the collection of spread material in special trays set out across the paddock at even spacings.

The second and more simplistic method to determine the approximate spread width is to estimate the width by eye. This can be done by spreading a small amount of product at the desired rate onto clear ground or onto a length of shade cloth stretched out and pegged to the ground that contrasts with the fertiliser. This should demonstrate the approximate bout width and the tapering off of product at the extreme edges of the spread.

It may be necessary to drive over the same path 2 or 3 times during the test if spreading light rates of granular fertiliser.

The bout width is the distance that you can drive apart on the paddock, maintaining even coverage of product across the entire paddock. The bout width will be less than the overall spread width.

Determining Bulk Density

To determine the door and gearbox setting it will help if you know the bulk density of the particular product. This is done by using the density meter that is supplied with the spreader and by carrying out the following steps.

Fig.31 Density meter.

1. Fill the meter with product and level off.
2. Balance on ring and slide weight out until level bubble is between the marks.
3. Read density from the scale in tonnes per cubic metre (top scale).

Changing Gearbox Ratio

The feed chain spreader is equipped with a ground driven 3-speed gearbox. The gearbox has been designed to offer a large variation in feed chain speeds to cope with the low and high application rates.

Fig.32 Ground driven Gearbox.

To change between ratios you will need to remove the clip from the inside face of the top shaft (opposite the jockey wheel) on the gearbox.

Fig.33 Selector pin and clip.

Once removed, the selector pin can be moved in to select low ratio, centralised to select high ratio or fully withdrawn to drive medium ratio. It will be necessary to either rock the jockey wheel backwards and forwards or to slowly turn the jockey wheel to allow the internal drive key to slide from one gear to the next.

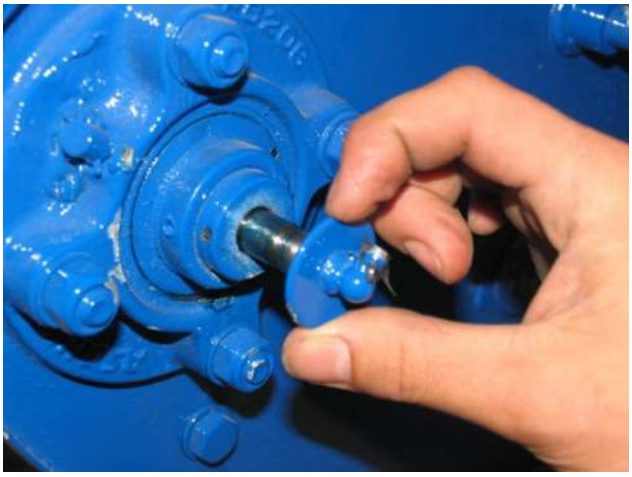

Fig.34 .Selector pin central.

Once the correct ratio has been chosen replace the retaining clip to lock the selector pin into position.

Note: Always use the lowest gear possible at the highest door setting to minimise the loading on the gearbox.

<u>Caution:</u>

The rear door should never be operated in the closed position with fertiliser that can pack. Soft pelletised fertiliser like urea will operate comfortably with a 40mm door opening. Harder pelletised fertilisers like MAP, DAP, Potash or Single/Double/Triple Super's will require a minimum door height of 75mm to ensure drive chain pressure is managed. Excessive feed chain pressure will jam the drive mechanism and potentially break the drive bolts. Refer page 10 for information drive bolt replacement.

IMPORTANT: Grease gearbox before using. Ensure that the gear selector pin has been fully pushed in before greasing the nipple at the end of the pin.

Refer to the daily maintenance section on page 35 for further information.

Rear Door Adjustment

To set the rear door, remove the clip from the adjusting handle and rotate to raise or lower the door to the required position.

Fig.35 Rear Door Adjustment.

A pointer, attached to the top of the door, and calibration decal is used to show the distance from the bottom of the floor to the underside of the door. Replace the clip when the door is set to the desired height.

Fig.36 Rear Door Adjustment scale.

Fig.37 Spreading urea.

Setting Application Rate

Introduction

The application rate for the spreader can be set as per the charts at the rear of the manual or by calibrating the spreader.

The charts estimate the flow characteristics of the product to determine the door setting. Different products flow at different rates. For instance, urea flows faster than more irregular shaped products. The chart can only estimate the actual door setting required for the various application rates.

If a high degree of accuracy is required, particularly when spreading low rates, we suggest a calibration test be performed. The calibration process will allow the operator to collect a sample of the actual product being applied to determine the exact door setting to achieve the desired application rate.

To collect a sample you will need to catch the material as it falls off the feed chain. This can be done by laying a small tarp or bag in the rear discharge area of the spreader.

Application Rate by the Rate Chart

1. Determine the bulk density of the product.
2. Estimate the bout width that the spreader will be driven.
3. Refer to the Rate Charts at the rear of the manual to determine the rear door setting.

Note: Always use the lowest gear possible at the highest door setting to minimise the loading on the gearbox.

Example (Note. Examples in this section are for demonstration only. Actual values may differ from the charts in rear of book)

Shown in figure 38, urea that has a bulk density of 0.75 tonnes per cubic metre is to be spread to a 20 metre bout width at 80 kg/ha. By using the lowest gearbox ratio possible, using the 'Gear Box…Low' chart, and reading across the chart we can see that the estimated rear door setting should be 119mm opening.

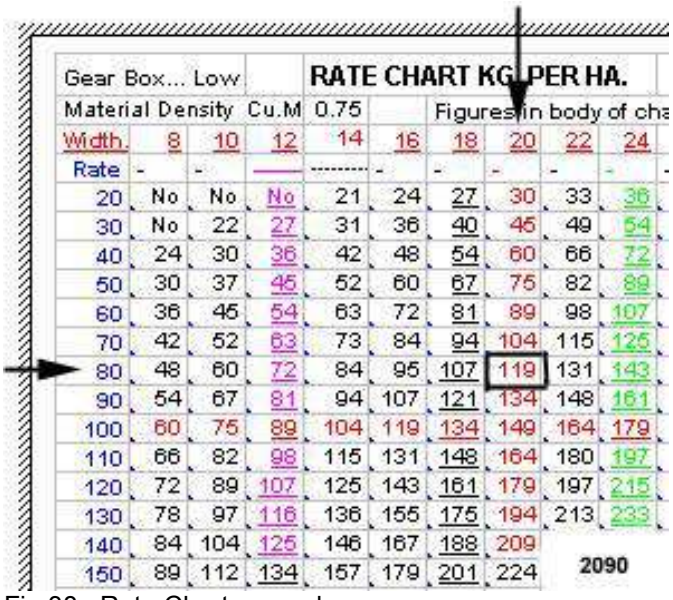

Gear Box... Low				RATE CHART KG PER HA.					
Material Density			Cu.M	0.75		Figures in body of cha			
Width.	8	10	12	14	16	18	20	22	24
Rate	-	-	——	--------	-	-	-	-	-
20	No	No	No	21	24	27	30	33	36
30	No	22	27	31	36	40	45	49	54
40	24	30	36	42	48	54	60	66	72
50	30	37	45	52	60	67	75	82	89
60	36	45	54	63	72	81	89	98	107
70	42	52	63	73	84	94	104	115	125
80	48	60	72	84	95	107	119	131	143
90	54	67	81	94	107	121	134	148	161
100	60	75	89	104	119	134	149	164	179
110	66	82	98	115	131	148	164	180	197
120	72	89	107	125	143	161	179	197	215
130	78	97	116	136	155	175	194	213	233
140	84	104	125	146	167	188	209		
150	89	112	134	157	179	201	224		

2090

Fig.38 Rate Chart example.

IMPORTANT: If the rate chart is the only method to be used for setting the rear door opening, a known weight of product should be used in the spreader for the first load to ensure the correct application rate is being achieved.

Application Rate Calibration Process

1. Refer to the Rate charts in the rear of the manual to determine the most appropriate gearbox ratio and door setting for your particular application rate.

Note: Always use the lowest gear possible at the highest door setting to minimise the loading on the gearbox.

2. Set ratio and door setting as per the chart.
3. Place material in the hopper. You will only need to cover the rear door area to perform the calibration process.
4. Determine the bout width you will drive at. The bout width is narrower than the overall spread width (refer to *Spreading Width* for further details).
5. Refer to the Calibration Jockey Wheel Turns table on page 26 to determine the number of rotations required at the jockey wheel to simulate 1/20th of a hectare.
6. Place a bag or liner in the discharge area at the rear of the spreader and prime the feed chain with product.

Fig.39 Collection sample after priming.

7. Once primed i.e. a level and even flow of product across the feed chain to the drop off area, clean the liner or trays out and replace them for the actual test.

Fig.40 Feed chain primed for calibration test.

8. Turn the jockey wheel the appropriate number of turns to simulate 1/20th of a hectare, or if the application rate is above 500kg/ha turn the handle 1/10th of the stated handle turns.

Fig.41 Rotating the Jockey wheel.

Example

Spreading lime with an estimated bout width of 10 metres. The number of jockey wheel rotations in table 44 is 39.1 turns. Because the application rate is above 500kg/ha we will only rotate the jockey wheel 1/10th of the standard turns (3.9 turns). This means that when we have collected 1/200th of a hectare sample and should multiply the sample weight by 200 to determine the application rate per hectare.

9. Weigh the sample collected and multiply the answer by 20 if the full number of handle turns for 1/20th of a hectare was used.

Fig.42. Weighing the sample.

10. Increase or reduce the rear door setting to increase or reduce the application rate.

Example 1

Urea is to be spread at an application rate of 80kg/ha. The bout width for this particular product has been estimated at 20 metres. The bulk density of the urea has been checked and measures 0.76 tonnes/cubic metre. Using the Rate Chart from the rear of the manual the closest chart applicable using the lowest gearbox ratio possible has been reproduced in Fig. 43.

Gear Box... Low				RATE CHART KG PER HA.					
Material Density			Cu.M	0.75		Figures in body of cha			
Width.	8	10	12	14	16	18	20	22	24
Rate	-	-	—	--------	-	-	-	-	-
20	No	No	No	21	24	27	30	33	36
30	No	22	27	31	36	40	45	49	54
40	24	30	36	42	48	54	60	66	72
50	30	37	45	52	60	67	75	82	89
60	36	45	54	63	72	81	89	98	107
70	42	52	63	73	84	94	104	115	125
80	48	60	72	84	95	107	119	131	143
90	54	67	81	94	107	121	134	148	161
100	60	75	89	104	119	134	149	164	179
110	66	82	98	115	131	148	164	180	197
120	72	89	107	125	143	161	179	197	215
130	78	97	116	136	155	175	194	213	233
140	84	104	125	146	167	188	209		
150	89	112	134	157	179	201	224		

2090

Fig.43 Rate Chart example.

The chart shows an estimated rear door opening of 119mm. After setting the rear door to this setting the jockey wheel was rotated to prime the feed chain and discharge area. The collection bag or trays were emptied and replaced ready for the actual test. The jockey wheel was rotated 19.6 turns as per table 44 on page 26 for a 1/20th of a hectare test at a 20 metre bout width.

The total sample was then weighed and multiplied by 20 to obtain the application rate.

Eg. Sample weight 3.78kg x 20 = 75kg/ha.

The door setting could be opened by a couple of millimetres to increase the rate to the required 80 kg/ha.

Example 2

Lime with a bulk density of 1.09 tonnes/cubic metre is to be spread at a 10 metres width at a rate of 1600kg/ha. The best gearbox ratio that can be used for this product from the Rate Chart is high ratio chart with a bulk density of 1.1 t/cubic m.

The chart suggests a door opening of 94mm. After priming, cleaning and replacing the calibration trays or tarp, the jockey wheel was rotated 1/10th of 39.1 turns because the application rate was above 500kg/ha. This means that instead of 39.1 turns, the wheel was rotated 3.9 turns. It also means that instead of multiplying the sample weight from both trays by 20 it was multiplied by 200 e.g. (10 x 20 =200).

In this example let us assume the total sample weight was 8.42kg.

8.42 x 200 = 1684kg/ha.

In this case it would be best to lower the rear door slightly and retest.

G/Drive Calibration Jockey Wheel Turns

For application rates greater than 500kg/ha test for 1/200th of a hectare

Bout Width (m)	*1/20th Hectare*	*Bout Width (m)*	*1/20th Hectare*
5	78.2	21	18.6
5.5	71.1	22	17.8
6	65.2	23	17.0
6.5	60.2	24	16.3
7	55.9	25	15.6
7.5	52.1	26	15.0
8	48.9	27	14.5
8.5	46.0	28	14.0
9	43.4	29	13.5
10	39.1	30	13.0
11	35.5	31	12.6
12	32.6	32	12.2
13	30.1	33	11.8
14	27.9	34	11.5
15	26.1	35	11.2
16	24.4	36	10.9
17	23.0	37	10.6
18	21.7	38	10.3
19	20.6	39	10.0
20	19.6	40	9.8

Table 44

Disclaimer
There are many variables that affect the spreading performance of the Gason multi-purpose spreader. It is important the wind speed and direction, ground contour, plant height and fertiliser consistency are considered prior to determining the spreader settings and width of pass.

Application Rate Records – Ground Drive

Spreader Application Record Sheet – Ground Drive

Date	Material	Application Rate kg/ha	Bulk Density Tonnes/cubic metre	Gearbox Ratio	Rear Door Setting (mm)	Bout Width (metres)	Adjustments (Centre Vee ext.)	Comments

VRT Operation

The VRT Hydraulic Drive Spreader uses a control monitor mounted in the cab to operate the spreader. Both spinner speed and application rates can be set and adjusted at the monitor. It is possible to change the application rate either manually or with an application map while spreading. The operator will need to input data or select a previous product setup before commencing a spreader task.

Monitor System

The standard monitor system for the Gason VRT Spreader is the Farmscan Ag 7300 Controller. Other monitor options are available and although the basic concept remains the same, there will be some differences in terminology and screen layouts for each brand. Refer to the monitor manufacturers operating manual for comprehensive information on each monitor and the Gason Quick Reference Guide as supplied with the VRT spreader.

Fig.45 Farmscan Ag's 7300 monitor in cab

Information such as products bulk density, desired spreader width, application rate and door opening are all used by the controller to set a calibration factor. This factor can be fine-tuned once some material has been spread to determine if it is going out at a correct rate.

Setting Spinner Speed

Spinner speed is one of the most important factors in achieving an accurate spread pattern. The spinner speed is set from the spreader control monitor in the cab. Refer to tables 17 & 18 on page 13 for the recommended spinner speed based on spinner disc fitted, product and application rate. Refer Fig.46 for setup process.

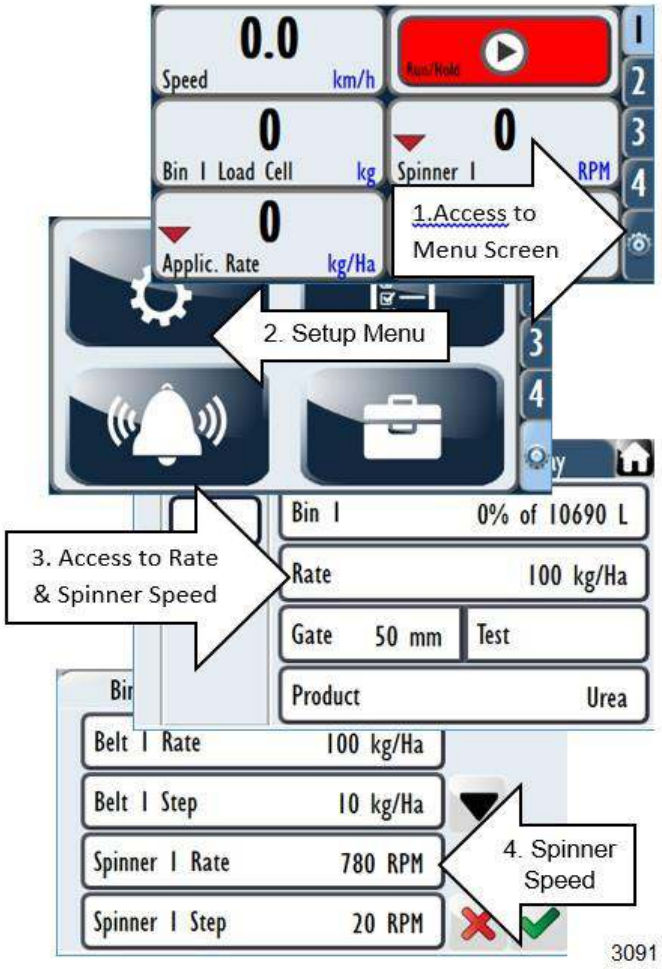

Fig.46 Steps to access spinner speed setting.

The spinner speed can also be adjusted from the main operating screen by touching the Spinner 1 tab and using either the + or – symbol to alter the spinner speed. For this to work, you will need to have added a 'Step' value at the same time as the initial spinner speed.

To resume the standard active tile, just touch the middle of that particular tab, in between the + and – symbols.

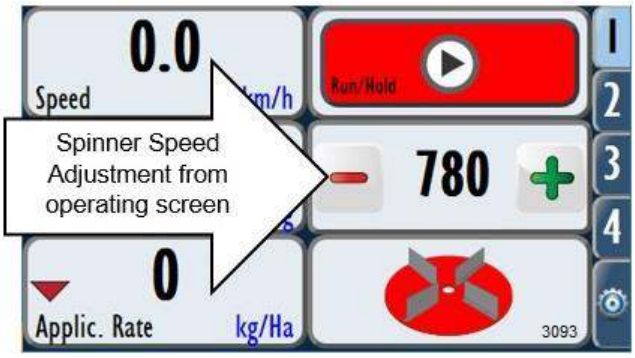

Fig.47 Selecting the tile to make an adjustment to the spinner speed.

Product & Density Selection

To set up a new material or change to a previously spread product, you will need to access the setup menu.

Select 'Product' tile, then 'Product' name if you wish to change the product currently shown. You can also create a new product or edit the existing name.

Enter the bulk density in the 'Details' screen. If you don't know the bulk density of the product, use the 'Density Scale' that was supplied with the spreader to determine the kg/l value. A calculated 'Pulses/kg' value will be generated to control the speed of the feed chain.

Fig.48 Scales used to check product bulk density.

This product calibration figure can be fine-tuned by changing the 'Flow Factor' of the product. This will then either increase or decrease the output of product depending on its flow properties. Refer to the section '*Making adjustment to the 'Flow Factor'* (page 30) or further information.

Rear Door Setting

The door opening will determine how fast the feed chain will run (rpm) to obtain the required application rate.

When doing light rates, the door will generally be set lower than when doing high rates. Refer to Table 51 for the suggested door opening. Once set, input this dimension into the monitor under the 'Gate' tile located on the 'Bin 1 screen'.

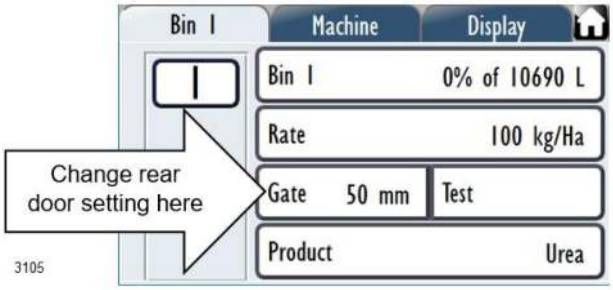

Fig.49 Changing the door setting value.

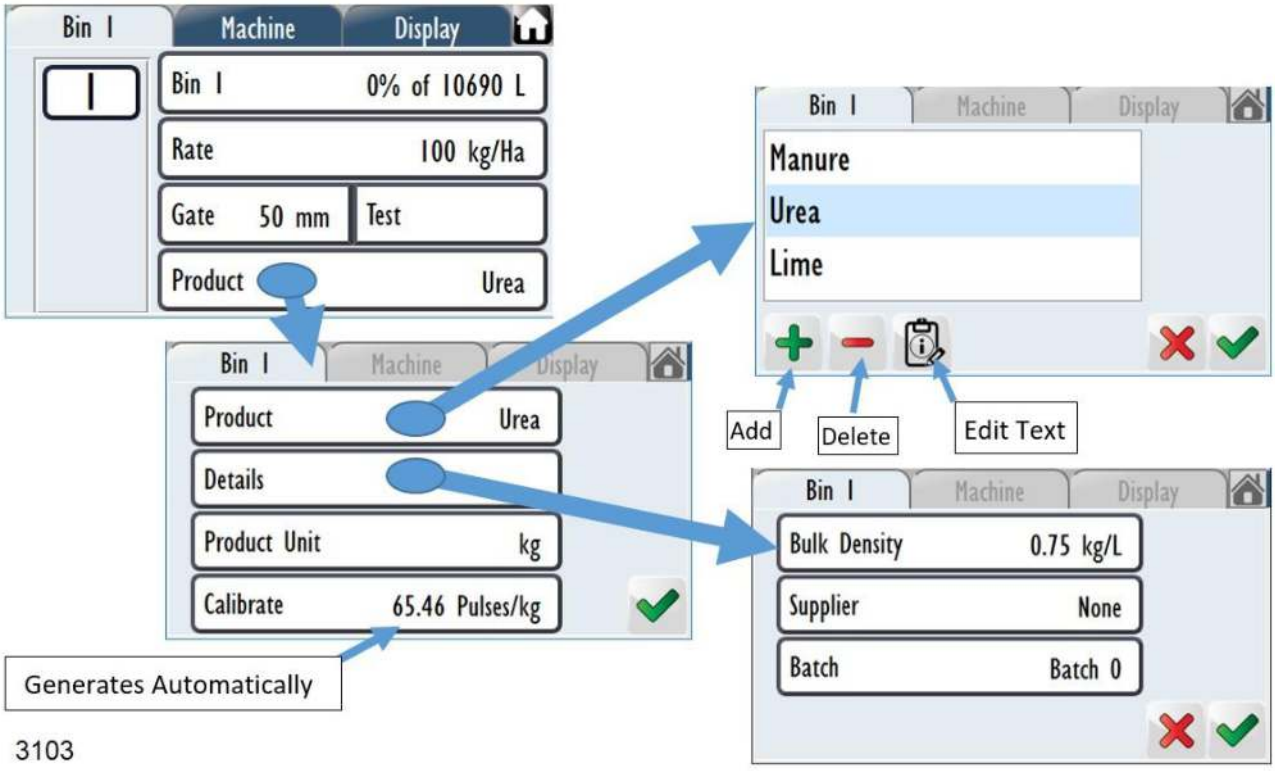

Fig.50 Product Selection & changing the bulk density of the product on the Farmscan AG 7300 monitor.

Suggested Discharge Door Opening for Common Product on VRT Drive Spreader

Calculated for 730mm wide feed chain spreader's at 20km/h

Product	Rate (kg/ha)	Width of spread (m)	Suggested Door Opening (mm)
Urea	40-100	24	40 (min. setting)
Urea	40-100	36	50
Urea	100-200	36	75
Potash/Super/MAP	100-200	36	75
Lime/Gypsum	500-1500	12	100
Lime/Gypsum	1500-3000	12	175
Manure	Product dependent	Product dependent	240 (fully open)

Table 51 Door Opening chart for Hydraulic Drive VRT spreader models

Making adjustment to the 'Flow Factor'

The 'Flow Factor' will default to 100% unless previously altered. It is adjusted if the product is going out too light or too heavy. **Increase the % to increase the product output**. Decrease the % to reduce the flow of product.

Adjustment of the flow factor will not adjust the onscreen recorded rate of product used.

Example of when to change the 'Flow Factor' % setting:-

Having placed a known weight of product in the bin and spread it over a known area, calculate the actual flow rate by dividing the weight that has been spread by the number of hectares covered. In this example we will say that a 1000kg pre-weighed bulker bag of urea has been loaded into the spreader. The set application rate is 80kg/ha with a spread width of 36m. After covering 10.4ha, the product runs out. Divide the product weight dispensed by the hectares covered:

$$\frac{\text{Product Used (kg)}}{\text{Area covered (ha)}} = \text{Applied Kg/ha}$$

$$\frac{1000\text{kg}}{10.4\text{ha}} = 96\text{kg/ha (calculated rate used)}$$

To adjust the Flow Factor % to achieve the desired 80kg/ha without upsetting the history of the amount applied, use the following equation.

$$\frac{\text{Set Applic. Rate (kg/ha) x Current Flow factor (\%)}}{\text{Calculated Rate of application (kg/ha)}}$$

$$\frac{80\text{ kg/ha x }100\%}{96\text{ kg/ha}} = 83.3\%$$

Once the adjustment to the flow factor has been determined you will need to enter the 'Flow Factor' setting screen via the 'Calibrate' tab.

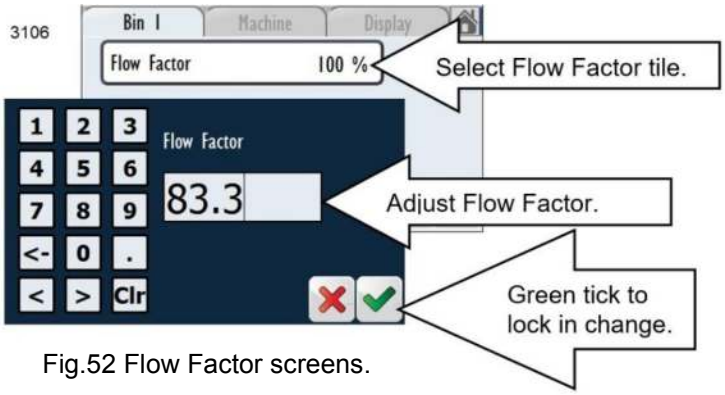

Fig.52 Flow Factor screens.

Reasons why the Flow Factor alters from 100%.

With some free-flowing products, the speed at which the material meters out the back door can be quicker than for dense and stickier products. For this reason, it may be necessary to alter the default 100% either up or down slightly too fine tune the application rate to the product being spread.

Spreaders fitted with the Load Cell option will have an advantage in that checking the actual amount being spread over a known area is extremely simple. By just recording the original weight vs the weight still in the bin after several hectares, the operator can subtract one from the other to determine the amount of material used.

Setting the Spreader Width

The spreader width setting can be revised on the measurement screen which is accessed via the Machine menu. Refer to Fig.53 for a visual layout.

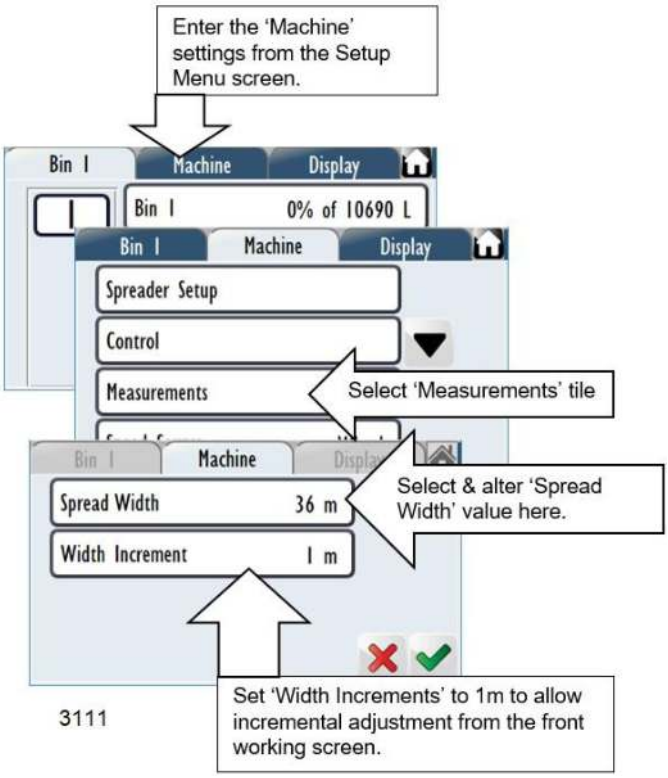

Fig. 53 Setting the Spread width in the Machine setting section of the monitor.

Alternatively, you can adjust the current width of spread setting from the main operating screen as long as the increment setting has a value (factory set is 1 metre increments).

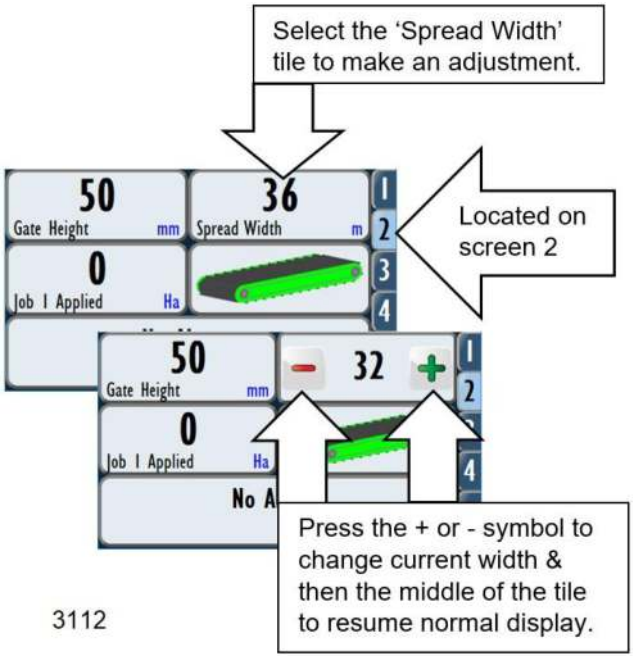

Fig.54 Adjusting spread width from operating screen.

Checklist of Monitor Setup

Before starting to spread your product, it is best to check all items have been setup correctly using the Checklist below (refer Fig.55).

<u>Checklist of VRT monitor information that must be set before spreading</u>

	Item	*Screen Location*	*Example*	*Importance*
	Spread Width	Main Operating Screen or 'Measurements' screen.	36m	Critical
	Application Rate	Bin 1 Setup Menu/Rate or Main Operating Screen	80kg/Ha	Critical
	Rate Steps	Bin 1 Setup Menu/Rate	20kg/Ha	Optional
	Gate Setting	Bin 1 Setup Menu or Main Operating Screen	70mm	Critical
	Product Name	Bin 1 Setup Menu/Prod.	Urea	Critical
	Bulk Density	Bin 1 Setup Menu/Prod. (use red scales to check)	0.75kg/L	Critical
	Flow Factor	Bin 1 Setup Menu / Prod. /Calibrate/Flow Factor	100%	Critical
	Job Applied	Main Operation. Screen/Tab 2	__Ha	Optional

Fig. 55 VRT Drive Monitor Set-up information relevant to the Farmscan Ag 7300 monitor.

It is highly recommended that you fill out the Application Record Sheet (refer page 34) once the spreader is setup and the operator is happy with its performance. By doing this, it will give the operator a quick setup information if spreading the same material in the future.

Starting to Spread Product

1. Place material in the bin.
2. Set your Job 1 Applied hectares to zero. Note: to change the job name or to set up a new job, refer to the 'Setting up a new Job Record' section.

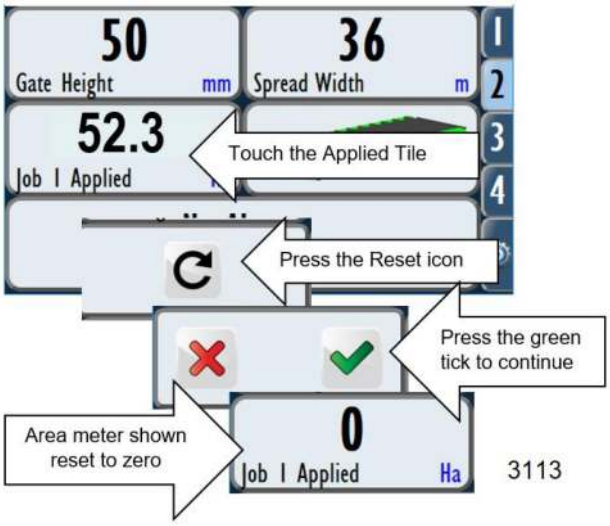

Fig.56 Resetting the Hectare Count on the operating screen

3. Engage the hydraulic remotes at the tractor. Initial flow rate should be set at 40 to 60L/min.
4. After checking that no one is standing near the rear of the spreader, start the spinners from screen 1 by pressing the 'Spinner Control' tab. Spinners should start-up and run to your pre-set value.
5. Use the Run/Hold tile to engage and disengage the Feed Chain. The Run/Hold tile will change from red to green when active.

Warning! The Feed chain will start to prime the system if taken Off Hold while the spreader is still stationary. Ensure no one is near the machine before engaging the Run mode.

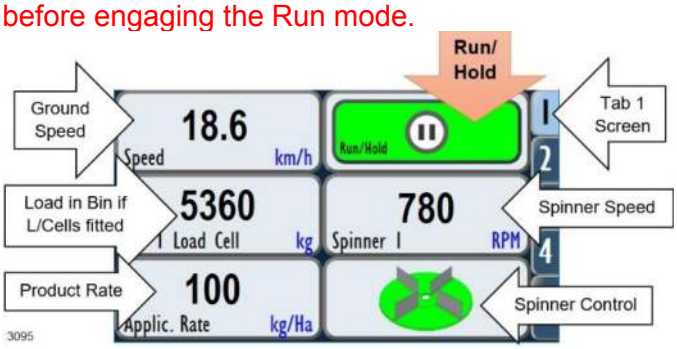

Fig.57 Screen 1 showing the spreader operating

6. Drive at a suitable speed. The application rate should show the correct rate as your driving.

Note: If it doesn't get to your desired rate, slow your ground speed down to see if this helps. You may need to increase the flow of oil from the tractor to the feed chain remote to allow it to run faster. Maximum feed chain speed is 28rpm. This can be viewed on screen 3 as Feed Chain RPM.

7. To stop spreading, simply press the green Run/Hold tile to place back on hold.

Setting up a new Job Record

The operator has the option to set up multiple jobs for each spreading task, or to simply reset the current value on screen 2 to zero to record hectares covered for the paddock.

Fig.58 Accessing the Records page

VRT Quick Reference Guide

The Quick Reference Guide supplied with your VRT spreader will list the basic operation information required to get you started. It is not meant to replace the monitor manufacturer's operators manual, simply to offer limited information in a concise format to make it easier for the operator to get started.

Fig.59 Laminated Quick Reference Guide specific to the monitor option chosen for your VRT Hydraulic Drive Spreader

Factory setting for the monitor set up and Alarm setting information will be shown on the last page of the laminated guide.

In addition to the Quick Reference Guide, a USB memory card will have been supplied with the manual loaded with the monitor factory setup data. It is suggested that the owner copies the loaded file across onto their pc or laptop so that they will have a record of the factory settings.

Fig.60 Gason supplied USB memory card inserted into the cable extension on the 7300 monitor.

Extras

Fig.61 Special spanner supplied with the spreader to loosen the plastic handle knobs if they are over tightened by hand. Do not use the handle to tighten the knobs. Tighten by hand only.

Fig.62 The Yellow handled fasteners used to hold the WideSpread Centre Vee and the base Ctr Vee must be fitted with the anti-loosening grommet to prevent the knob from coming undone. Replace with Gason part No. 800698.

Spreader Application Record Sheet – VRT Drive

Date	Material	Applic. Rate kg/ha	Bulk Density Kg/l	Rear Door (mm)	Spinner Revs (rpm)	Bout Width (metres)	Cal. (p/kg)	Flow Factor	Discharge Opening	Fin Settings (WideSpread Discs)	Comments
example	Urea	60	0.75	50	780	36	73.3	112	35/13	1 /C	Cover plates in bin

General Maintenance

Introduction

Regular maintenance will ensure trouble free operation for the life of the spreader. It is recommended that when replacing parts you use genuine components and fasteners of the same grade as the original machine.

DO NOT COMPROMISE SAFETY WITH FAULTY COMPONENTS

Daily Check list

1. Keep the machine as clean as possible.
2. Grease gearbox gear selector pin on G/Drive spreader on a daily basis. Ensure that the gear selector pin has been fully pushed in before greasing the nipple at the end of the pin. Best done when the bin is empty.

Fig.63 Selector pin ready for greasing.

3. Check that the drive bolts on the drive shaft are all in place and functional.
4. Check main feed chain for damage and that it turns freely at the jockey wheel. This is best done when the spreader is empty and in low or medium gear.
5. Check hydraulic system for leaks or damaged hoses.

Weekly Checklist

1. Check all wheel nuts are tighten weekly or after transportation.
2. Grease all gearbox bearings and top selector pin (gear ratio selector). Ensure that the selector pin is fully pushed in before pumping grease into the grease nipple on the end of the pin.
3. Grease all driveshaft bearings at the rear of the spreader.
4. Grease the bushes on the front and rear idler shafts under the feed chain.

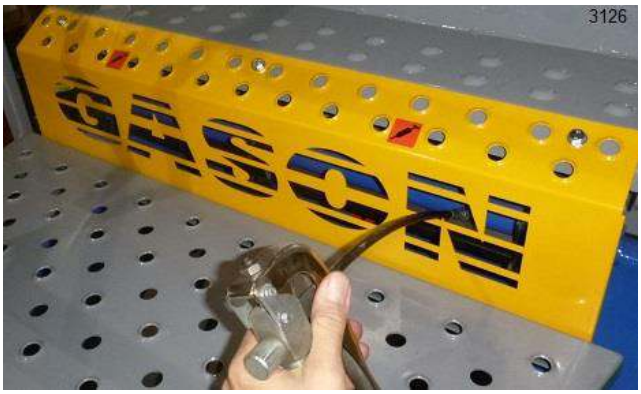

Fig64. Front Idler shaft grease access.

5. Check that the feed chain tension springs at the front of the spreader is operating within its range.

Fig.65 Feed chain tension spring.

6. Check spinners for physical damage and that the fins and discs are serviceable.

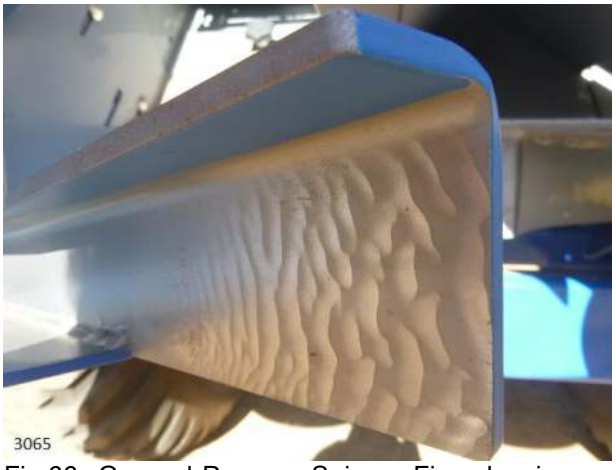

Fig.66 General Purpose Spinner Fins showing some signs of normal wear.

End of Season Checklist

General Checklist

1. Wash Spreader clean of all fertiliser product and dirt.
2. Grease all bearings and bushes.
3. Inspect hydraulic system for leaks or damaged hoses.
4. Inspect the hydraulic motors at the shaft end for oil leaks.
5. Check spinners for physical damage and that they run reasonably true.
6. Check that the spinner retaining nyloc nuts are in serviceable condition. The nyloc can be reused 20 times but they should then be replaced. A spare set have been supplied with the new spreader.
7. Check feed chain for damage. Rotate feed chain shaft to inspect entire chain. Look for bent or broken slats or stiff chain links.
8. Check brushes at the front and rear of the spreader are in place and undamaged.
9. Check that the drive bolts on the drive shaft are all in place and functional.

Specific to Ground Drive Spreaders

10. Check that the tachometer is operating correctly and that the sensor is not damaged
11. Check that the gearbox transport locking pin functions.

VRT Related Check List

1. Check the level & quality of the oil in the VRT reduction gearbox. The sight glass should be totally covered with clean oil. Refer to the Specification page for oil type and volume.
2. Check the electrical cables and plugs for damage or corrosion of the pins.
3. Check the spinner sensor & wheel sensor (if fitted) are functioning correctly. Light in cable end of sensor should flash when target passes.

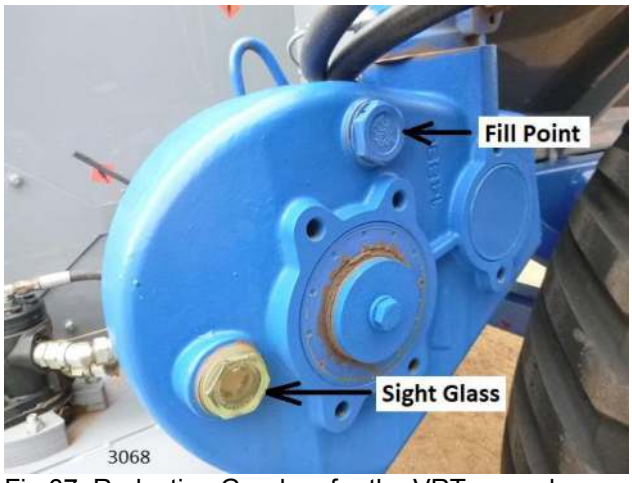

Fig.67 Reduction Gearbox for the VRT spreader

It is recommended that when replacing parts you use genuine components and fasteners of the same grade as originally fitted.

Fig.68 Base Unit 12T Model on 2m rear axle

Problem	***Possible Solution***
Transport/Towing	
1. Spreader tending to shunt or bounce in tractors hitch.	➢ Check tractors drawbar pin size. Replaceable collar in the spreader tongue has been designed for a 1-1/2” (38mm) pin. Optional reducing bush to suit 1-1/4” pin is available (222588). ➢ Make sure that the load has been placed evenly in the spreader. Load will shift rearward as the product is spread.
Spinner Operation (Ground Drive Model)	
1. Spinner Speed Varies during operation or unable to obtain maximum speed (780rpm).	➢ Check that the handle on the flow control valve, located on the inside of the trailer frame at the front of the spreader, is in the open position, handle against the stop bracket (page 19). ➢ Some variation in spinner speed will occur when an irregular load is placed on the spinners i.e. product falling in large clumps into the spinners. This is normal.
Tachometer Display (Ground Drive Model)	
1. Tacho does not display when the spinners rotate.	➢ Check that the sensor has not been damaged. ➢ Check that the sensor wire is intact. ➢ Check battery voltage. Use a replaceable **3.6V AA** battery. Please contact your Gason dealer for further information regarding spinner tacho repair.
Spread Pattern (General Purpose Spinners)	
1. Poor spread pattern of product.	➢ Spread pattern variation will occur if the spinner speed varies excessively. ➢ Correct spinner speed is important and will affect spread pattern (refer page 13 for suggested speeds). ➢ Centre Vee panel may need to be removed for certain products (page 10).
2. Difficulties in obtaining width of spread.	➢ Spread width is dictated by the actual product type and spreader setup. Refer to pages 13-17 for more information.
Spread Pattern (WideSpread Spinners)	
1. Poor spread pattern.	➢ WideSpread spinner discs should be used for pelletised consistent products only. ➢ Refer to the section on spinner fin setting position and product discharge panel settings (pages 15-17).

Problem	***Possible Solution***
VRT Hydraulic Drive System`	
1. Hydraulic spinners do not operate when engaged on screen.	➢ Check that the tractors hydraulics are engaged & flowing the right way. ➢ Check that the quick release tips are plugged into the correct remote & that flow is in the right direction. Red band on hose end indicates pressure hose. Each hose should be labelled with 'Spinner' & 'Feed Chain' to ensure correct connection to tractor remotes. ➢ Use the manual override valve on the manifold to confirm hydraulic flow is getting to the spreader (refer page 9). ➢ Check that the Unipod (ECU) on the spreader has power. There will normally be a light on the ECU itself or you may need to use a multimeter.
2. Feed Chain does not engage	➢ Check that all values are set in the monitor to allow the feed chain to run. ➢ Check that the hydraulics on the tractor are engaged and that the couplings are attached correctly to the remotes. ➢ Check that you have a ground speed reading for the spreader. ➢ Use the manual override valve on the manifold to confirm hydraulic flow is getting to the spreader (refer page 9).
3. Cannot achieve set spinner speed or application rate on screen	➢ Check Hydraulic setting on tractor. It may be necessary to increase the flow rate of a particular remote bank to meet the demand. A minimum of 110Lt/min. at tractor remotes are required. ➢ Application rate may be too high or door setting too low for the particular product being spread. Check rate by slowing the ground speed down. If the rate increases, it may be necessary to make a rear door adjustment or narrow the spread width by slowing down the spinners. ➢ Check all operator inputs in the monitor to make sure all are correct.
4. Feed Chain jams or Drive Bolts breaking	➢ Check Door opening is large enough to reduce load on drive system. ➢ Ensure feed chain covers are fitted inside the bin for pelletised fertilisers. ➢ Check product is not contaminated with rocks which can jam at rear door.

7390 & 7312 PARTS

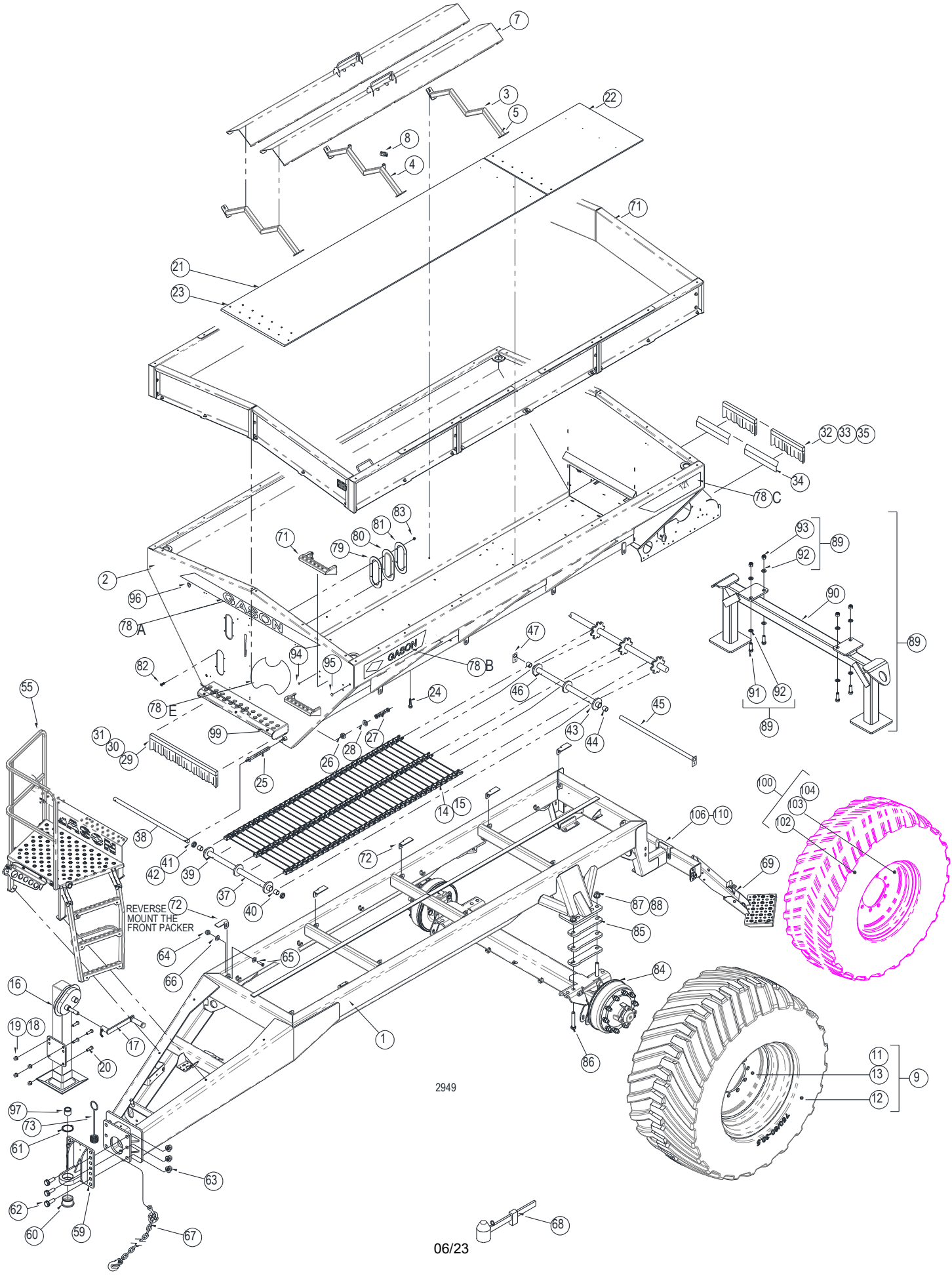
REVERSE MOUNT THE FRONT PACKER
GASON
2949

ITEM	PART NUMBER	DESCRIPTION	QTY.	
			9T	12T
1	230360	Trailer Frame – 9 & 12T Spreader	1	1
2	230362	Bin Assembly 9 & 12T	1	1
		Supports And Covers (Feed Chain)		
3	211944	Bracket Support	2	2
4	214904	Bracket Support-Central	1	1
5	917421	Screw Set M10 x 25 x 1.5 S/S	6	6
	903409	Nut Nyloc M10 SS GR316	6	6
	907417	Washer Flat S/S 10 x 21 x 1.2	12	12
7	230364	Cover - Feed Chain	2	2
8	212018	Lynch Pin 6mm	2	2
		Floatation Wheel Assy. Rear (Std)		
9	233814	Wheel Assy 650/65-30.5 L/H-POS.80 Offset	Ref.	-
	230365	Wheel Assy 750/60-30.5 L/H-POS.50 Offset (Not Shown)	-	Ref.
10	233815	Wheel Assy 650/65-30.5 R/H-POS.80 Offset (Not Shown)	Ref.	-
	230366	Wheel Assy 750/60-30.5 R/H-POS.50 Offset (Not Shown)	-	Ref.
11	211138	Valve Stem TR618A-Short	2	2
12	233817	Tyre 650/65-30.5 16 ply	2	-
	230367	Tyre 750/60-30.5 16 ply	-	2
13	233816	Wheel 20x30.5-10Stud +80 Pos. Offset	2	-
	230368 A	Wheel 24x30.5-10Stud +50 Pos. Offset	-	2
		Chain Assy.		
14	213138	Chain Weld Assy. 52 Lines (52 links)	3	3
	230369	Chain Weld Assy. 2 Lines (2 Links)	1	1
15	211708	Pin Clevis	3	3
		Jack Assy.		
16	222892	Jack Assy-2SP	1	1
17	222891	Handle – Jack	1	1
18	903930	Nyloc Nut M16	4	4
19	907415	Washer Flat M16 x 30 x 2	4	4
20	917707	Screw Set M16 x 50	4	4
		Polyethylene Sheet		
21	230372	Poly Sheet Long	1	1
22	210971	Poly Sheet Short	1	1
23	235239	Rivet Blind S/S C/SUNK 4.8mm	20	20
24	924812	Screw Self Tapper 1/2x10g PH S/S	8	8
		Front Idler Adjuster		
25	231018	Idler Adjuster-Spring	2	2
26	902900	Nut M20	2	2
27	230374	Spring Compression	2	2
28	230373	Retainer - Spring	2	2
		Brush To Front		
29	211153	Alum Front Brush Holder	1	1
30	211155	Skirt Front (Material 211022)	1	1
31	210776	Rivet Blind (Not Shown)	7	7
		Brush To Rear		

ITEM	PART NUMBER	DESCRIPTION	QTY.	
			9T	12T
32	211152	Alum. Rear Brush Holder	2	2
33	211154	Skirt Rear (Material 211022)	2	2
34	214382	Plate Rear Brush Mount	2	2
35	210776	Rivet Blind 4.8 S/S (Not Shown)	20	20
36				
		Front Idler		
37	210882	Idler Chain	1	1
38	210838	Shaft Front Idler	1	1
39	955001002	Nipple Grease	2	2
40	210959	Bush X-Lube	2	2
41	210681	Locking Collar	2	2
42	923213	Grub Screw ¼” x ¼” UNC	2	2
		Rear Idler		
43	210882	Rear Idler	1	1
44	210959	Bush X-Lube	2	2
45	210963	Idler Rear Shaft	1	1
46	955001002	Nipple Grease	4	4
47	214767	Idler Retainer Plate	1	1
48	917308	Screw Set M8 x 20 (Not Shown)	2	2
49	903302	Nut Nyloc M8 (Not Shown)	2	2
50	8001368	Washer Flat 8 x 17 x 2 (Not Shown)	4	4
		Platform (Front) Trailer		
55	231015	Platform Kit	1	1
56	917404	Screw Set M10x30 GR.8.8 (Not Shown)	4	4
57	906404	Washer Flat 3/8”x3/4x16G Z/P (Not Shown)	4	4
58	903406	Nut Nyloc M10 CL8 As1285 (Not Shown)	4	4
		Hitch Tongue Bush & Circlip		
59	227211	Hitch Tongue Assembly	1	1
60	208080	Bush, 40mm thk (Suits CAT 3/4, 1-1/2” to 2” Pin)	Ref.	Ref.
61	812669	Circlip Metric Series-E	Ref.	Ref.
62	913711	Bolt M20 x 55	6	6
63	903931	Nut Nyloc M20	6	6
		Bin to Frame		
64	903605	Nut Nyloc M12	10	10
65	917605	Screw Set M12 x 40	6	6
	913615	Bolt M12 x 50	4	4
66	906601	Washer Flat M12 x 32 x 2.5	36	36
		Safety Chain		
67	216338	Chain Safety 18 tonne Tow	1	1
		Scales		
68	211142	Scale - Fertiliser Density	1	1
		Miscellaneous		
69	232611	Rear Step Assembly L/H	1	1
70	232610	Rear Step Assembly R/H (Not Shown)	1	1

ITEM	PART NUMBER	DESCRIPTION	QTY.	
			9T	12T
71	230377	Hungry Board Kit -12T	-	1
72	232586	Shim RH 5mm	Ref.	Ref.
	232587	Shim LH 5mm	Ref.	Ref.
	232588	Shim RH 3mm	Ref.	Ref.
	232589	Shim LH 3mm	Ref.	Ref.
	232590	Shim RH 1.6mm	Ref.	Ref.
	232591	Shim LH 1.6mm	Ref.	Ref.
73	211089	Spring Front Drawbar SPR	1	1
		Decal		
74	228635	Decal-Warning Tow Empty (Not Shown)	1	1
75	206995	Decal-Transport Speed 40 km/h Maximum (Not Shown)	1	1
76	216072	Decal-Do Not Ride on Machine (Not Shown)	1	1
77	214315	Decal-Chain Tensioner (Not Shown)	2	2
78A	238185	Decal Gason Stripes 145mm high (Front bin face)	1	1
78B	238764	Decal Gason 160mm high (Sides only)	2	2
78C	238767	Decal 12T 160mm high (Sides only)	2	2
78D	221879	Decal Oversize (Rear bin face – Not shown)	1	1
78E	238779	Decal Aussie made Large. (Front bin face)	1	1
	207250	Decal-Lift Here (Not Shown)	4	4
	232952	Decal Gason Shaded 135 x 1925 (pre June 23)	Ref.	Ref.
		Sight Glass (Hole cut out dimension 75mm across)		
79	233819	Sight Glass Med-Bin	2	2
80	233869	Gasket-Sight Glass	2	2
81	233868	Plate-Sight Glass	2	2
82	917112	Screw Set M5x20 P/HD SS	8	8
83	903203	Nut Nyloc M5 S/S GR304	8	8
		Std Axle		
84	233891	Axle Assembly -9T 2.1m Un-Braked	Opt	-
	233893	Axle Assembly -9T 3m Un-Braked	Opt	-
	233892	Axle Assembly -9T 2.1m Braked	Opt	-
	233894	Axle Assembly -9T 3m Braked	Opt	-
	230996	Axle Assembly -12T 2.1m Un-Brakedm	-	Opt
	230998	Axle Assembly -12T 3m Un-Braked	-	Opt
	230997	Axle Assembly -12T 2.1m Braked	-	Opt
	230999	Axle Assembly -12T 3m Braked	-	Opt
		Multiset Axle (reversable wheel option allows 2.2 & 3m)		
	236982	MultiSet Axle Assembly -9T 2.2-3m Un-Braked	Opt	-
	236983	MultiSet Axle Assembly -12T 2.2-3m Un-Braked	-	Opt
85	233082	Spacer Axle 12T Spreader	6	6
86	913814	Bolt M24x140 GR8.8 Hex Z/P	4	4
87	907405	Washer Flat Structural M24 Gal	4	4
88	904905	Nut Nyloc M24 CL8 AS1285	4	4
		Transport Stand Kit		

ITEM	PART NUMBER	DESCRIPTION	QTY.	
			9T	12T
89	232679	Transport Stand with Hardware	-	Ref
90	232631	Bracket Transport Stand	-	1
91	913716	Bolt M16 x 50 Gr8.8 Hex Z/P	4	4
92	907415	Washer Flat M16 x 30mm	8	8
93	903930	Nut Nyloc M16 CL8 (AS1285)	4	4
	232681	Assembly Drawing Transport Kit (Not Shown)	Ref.	Ref.
		Miscellaneous Parts		
94	221328	Grommet – Hole Blanking (Small)	4	4
95	800325	Grommet – Hole Blanking (Large)	1	1
96	211157	Hook-Small Lashing	Ref.	Ref.
97	222588	Option-Sleeve-Hitch Tongue to suit 28.6mm pin (1-1/8”)	Ref.	Ref.
98				
99	208534	Nutsert M8X1.25P L/Flange	3	3
		Row Crop Wheel Assy. Rear (2 or 3m Option)		
100	235017	Wheel Assy 480/80R34 L/H-Pos.90 Offset (2m wheel ctrs)	Ref.	Ref.
	235021	Wheel Assy 480/80R34 L/H-Pos.40 Offset (3m wheel ctrs)	Ref.	Ref.
101	235018	Wheel Assy 480/80R34 R/H-Pos.90 Offset (2m wheel ctrs)	Ref.	Ref.
	235022	Wheel Assy 480/80R34 R/H-Pos.40 Offset (3m wheel ctrs)	Ref.	Ref.
102	235020	Tyre 480/80R34	2	2
103	235019	Wheel 16x34-10Stud +90 Pos. Offset	Ref.	Ref.
	235023	Wheel 16x34-10Stud +40 Pos. Offset	Ref.	Ref.
104	211138	Valve Stem TR618A-Short	2	2
105				
106	234072	Spinner Support	2	2
107	205828	Buffer Black Rubber	4	4
108	917404	Screw Set M10x30	4	4
109	907413	Washer Flat M10	4	4
110	909005	Washer Spring M10	4	4
111				
		MultiSet Wheel Assy Rear (2.2-3m Option) Not Shown		
112	238013	Wheel Assy 650/65-30.5 L/H-Pos.192 Offset (Not Shown)	Ref.	-
	238010	Wheel Assy 750/60-30.5 L/H-Pos.192 Offset (Not Shown)	-	Ref.
	236985	Wheel Assy 480/80R34 L/H-Pos.192 Offset (Not Shown)	Ref.	Ref.
113	238014	Wheel Assy 650/65-30.5 R/H-Pos.192 Offset (Not Shown)	Ref.	-
	238011	Wheel Assy 750/60-30.5 R/H-Pos.192 Offset (Not Shown)	-	Ref.
	236986	Wheel Assy 480/80R34 R/H-Pos.192 Offset (Not Shown)	Ref.	Ref.
114	238015	Wheel 20x30.5-10Stud +192 Pos. Offset	Ref.	-
	238012	Wheel 24x30.5-10Stud +192 Pos. Offset	-	Ref.
	236987	Wheel 16x34-10Stud +192 Pos. Offset	Ref.	Ref.

Hungry Boards

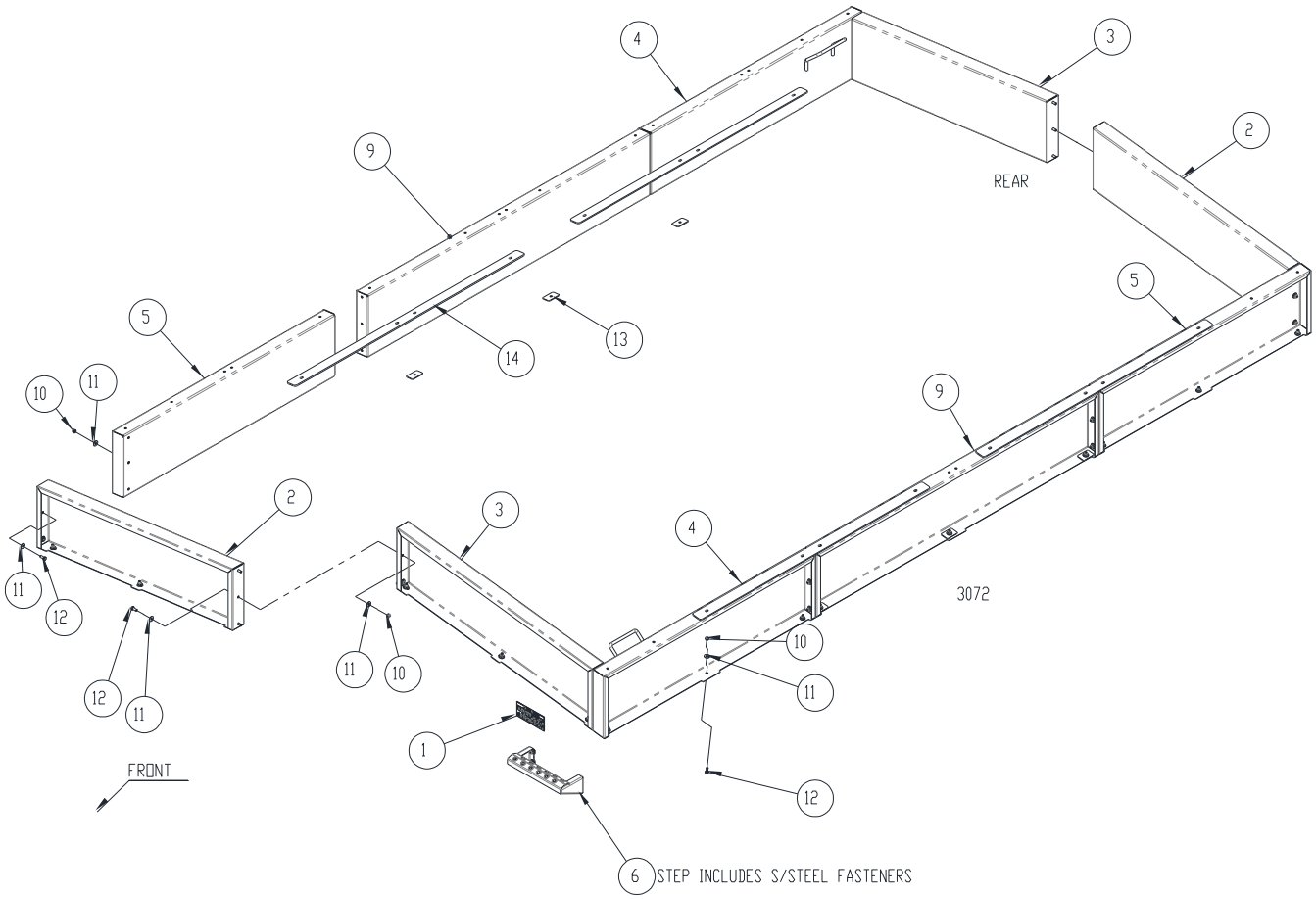

ITEM	PART NUMBER	DESCRIPTION	QTY.
1	229027	Decal – Hungry Boards	2
2	229028	Panel	2
3	229029	Panel	2
4	229030	Panel	2
5	229031	Panel	2
6	229034	Step Mount Kit	1
7	229044	Hungry Board Instructions	1
8	229383	Mount Step A3 Template	1
9	230376	Panel	2
10	903302	Nut Nyloc M8	60
11	906301	Washer Flat 5/16x7/8x16” Z/P	90
12	917308	Screw Set M8x20x1.25P	60
13	232922	Clamp Plate-Hungry Boards	6
14	232923	Brace Strip-Hungry Boards	4
-	230377	Hungry Board Kit 12T	Ref.

Platform Kit 9 & 12T Spreader

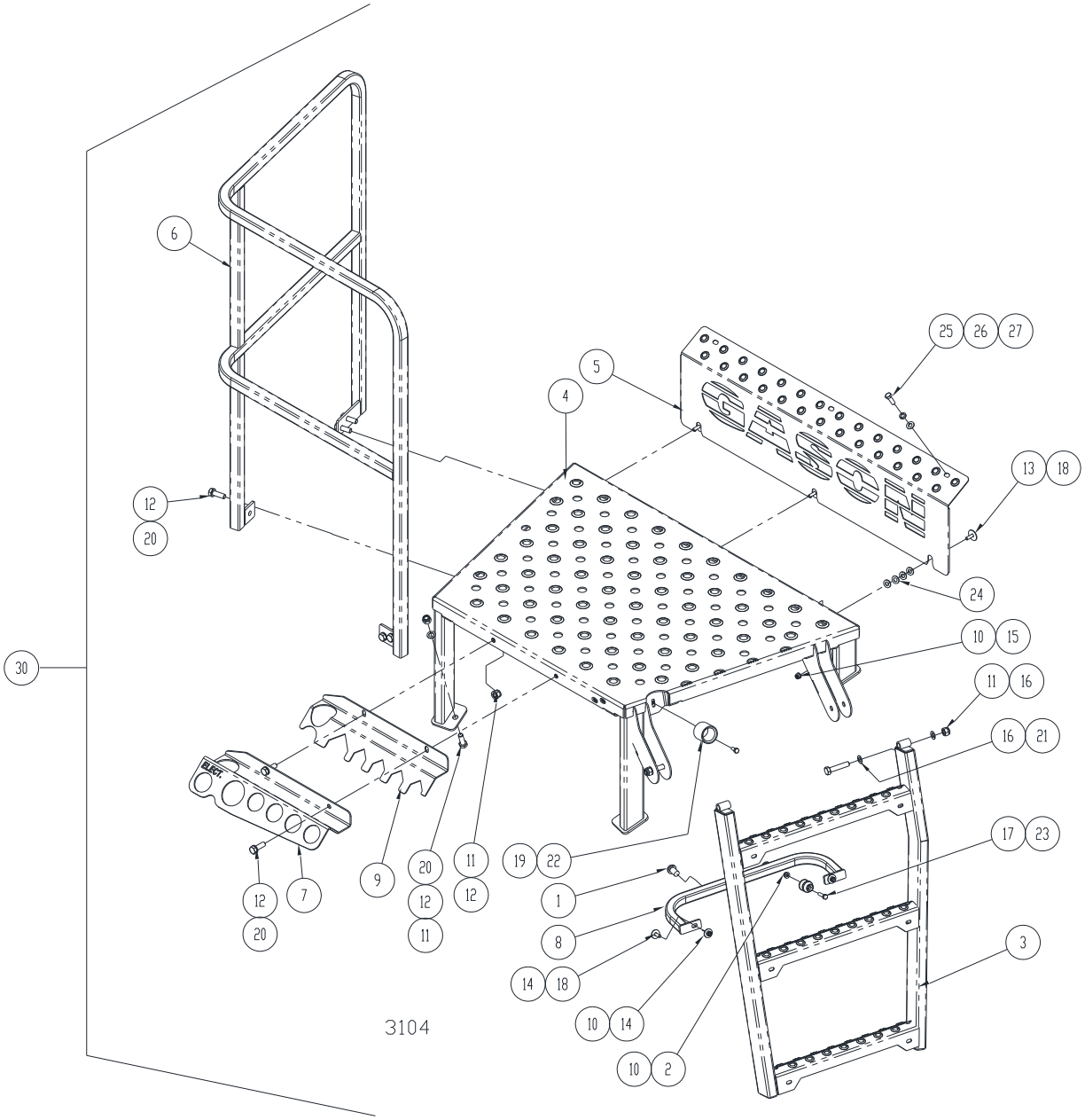

ITEM	PART NUMBER	DESCRIPTION	QTY.
1	205828	Buffer - Black Rubber Mushroom	2
2	206309	Washer Flat M6x12.7 Z/P	1
3	210734	Ladder - 1220 A/S	1
4	231012	Platform Assy - Access	1
5	231013	Cover - Feed Chain Front	1
6	231014	Handrail - Access Platform	1
7	232602	Bracket Hyd. Hose Tip	1
8	232915	Handle - Spreader Ladder	1

ITEM	PART NUMBER	DESCRIPTION	QTY.
9	233992	Backing Panel – Hyd. Hose Tip	1
10	903202	Nut Nyloc M6	7
11	903406	Nut Nyloc M10 CL8 (AS1285)	13
12	906404	Washer Flat 3/8”x3/4”x16G Z/P	18
13	907201	Washer Flat M6x25 Z/P	4
14	907203	Washer Flat M6x20mm	4
15	907204	Washer Flat M6x12.5 S/S	3
16	907400	Washer Flat 10x18x1.2mm	4
17	917203	Screw Set M6x25x1.0P Hex Gr8.8 Z/P	1
18	917204	Screw Set M6x20x1.0P HT Hex Z/P	5
19	917207	Screw Set M6x16 Hex Gr8.8 Z/P	1
20	917404	Screw Set M10x30 Gr8.8	11
21	917408	Screw Set M10x50 Gr8.8	2
22	8001175	Knob-Door Holder Female	1
23	8001175-2	Knob-Door Holder Male	1
24	907204	Washer Flat M6 x 12.5 S/S	12
25	917308	Screw Set M8 x 20	3
26	909004	Washer Spring M8	3
27	906301	Washer Flat M8	3
28			
29			
30	231015	Platform Kit – 9 & 12T Spreader	Ref.

Rear of Bin

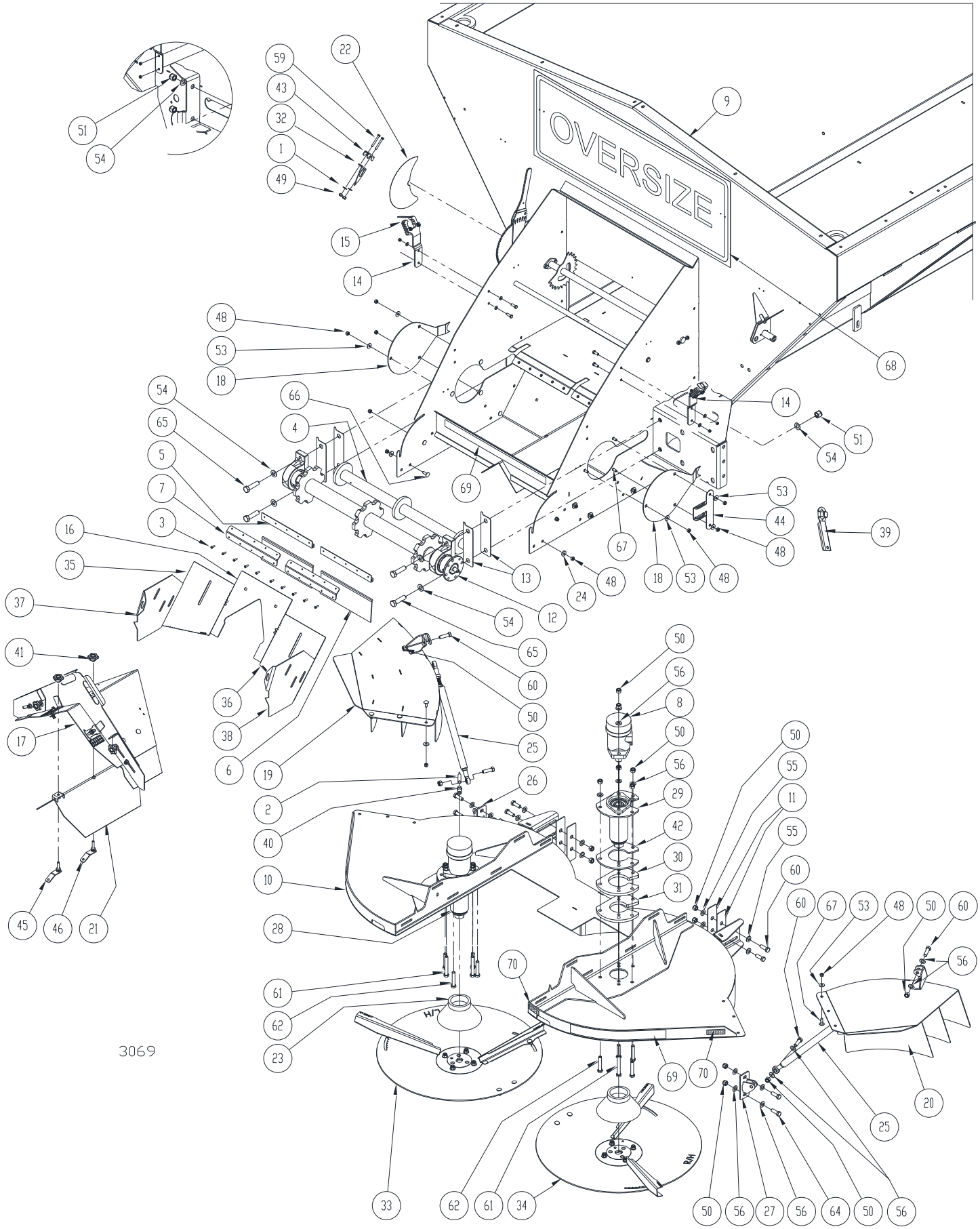

ITEM	PART NUMBER	DESCRIPTION	QTY.
1	206309	Washer Flat M6 x 12.7 Z/P	4
2	210666	Sensor Prox. 12mm (Used on VRT Spreader)	Ref.
3	210776	Rivet Blind S/S 4.8mm	20
4	210882	Idler – Front Chain	1
5	211152	Alum Rear Brush Holder	2
6	211154	Skirt Rear 5&7T Spreader	2
7	214382	Panel – Rear Bush MT	2
8	229353	Motor Hyd.59cc Spreader Spinners	2
9	230362	Bin Weld Assembly 9 & 12T	Ref.
10	230362-53	Panel Assy-Spinner Deck	1
11	230362-66	Spacer	4
12	230594	Shaft Assy-Feedchain	1
13	231094	Shim Bearing Packer 1.6mm	4
14	231391	Plate-Crank Arm Holder Mount (Refer 234401 for list of parts)	Ref.
15	231392	Clamp-Rubber Tie Down (Refer 234401 for list of parts)	Ref.
16	233270	Panel-Slide Guide	1
17	233272	CTR Vee Assembly - Wide	1
18	233345	Cover Panel	2
19	233357	Deflector-LH Side	1
20	233358	Deflector-RH Side	1
21	233696	Ctr Vee Assy-Medium	1
22	233738	Decal – Door Height Radial	1
23	233739	Deflector Spinner –Tube Type	2
24	233744	Washer Flat S/S M8 x 25 x 3mm Gr304	12
25	233862	Tie Rod – 12T Spreader	2
26	233863	Bracket Assy LH – Tie Rod	1
27	233865	Bracket Assy RH – Tie Rod	1
28	233902	Bearing Tube Assy – LH Spinner	1
29	233903	Bearing Tube Assy – RH Spinner	1
30	233971	Upper Plate – Spinner Tube (12mm) -Larger ID	2
31	233972	Lower Plate – Spinner Tube (12mm) -Smaller ID	2
32	233993	Pointer – Door Opening	1
33	234035	Spinner Assy-890 WideSpread L/H (Shown)	1
	234043	Spinner Assy-890 General Purpose L/H (Not Shown)	Ref.
34	234036	Spinner Assy-890 WideSpread R/H	1
	234044	Spinner Assy-890 General Purpose R/H (Not Shown)	Ref.
35	234058	Panel – Rear Slide L/H	1
36	234059	Panel – Rear Slide R/H	1
37	234060	Plate-Side Deflector – L/H	1
38	234061	Plate-Side Deflector –R/H	1
39	234069	Spanner	1
40	234073	Adaptor S/S - Spinner Sensor (Used on VRT Spreader)	Ref.

ITEM	PART NUMBER	DESCRIPTION	QTY.
41	234075	Hand knob-Black M8 Fem S/S	2
42	234127	Upper Plate – Spinner Tube (6mm) -Larger ID	2
43	234598	Clamp – Door Pointer	1
44	234611	Mtg Brkt - Spanner	1
45	235360	Retainer and Gromet – M8 x 45 Assy	1
46	235359	Retainer and Gromet – M8 x 50 Assy	1
47	903202	Nut Nyloc M6	2
48	903303	Nut Nyloc M8 S/S 316	24
49	903304	Nut Nyloc M8 x 1.25 Z/P CL10	2
50	903605	Nut Nyloc M12 CL8 AS1285	24
51	903930	Nut Nyloc M16 CL8	4
52			
53	907414	Washer Flat M8 x 20 x 1.6 S/S 304	12
54	812588	Washer Flat M16 Struct. Gal.	8
55	906601	Washer Flat M12 x 32mm x 2.5mm Z/P	8
56	907503	Washer Flat M12 x 24mm x 1.6mm Z/P	26
57	909006	Washer Spring M8 S/S	2
58			
59	913213	Bolt M6 x 45 Gr8.8 Hex Z/P	2
60	913614	Bolt M12 x 45 x 1.75P	8
61	913629	Bolt M12 x 90 x 1.75P	4
62	913630	Bolt M12 x 65 x 1.75P	6
63			
64	913608	Bolt M12 x 30 x 1.75P	4
65	917712	Screw Set M16 x 60 x 2.0P	4
66	926304	Bolt Coach M8 x 25 S/S Gr 316	10
67	926305	Bolt Coach M8 x 20 S/S Gr 316	14
68	221879	Decal Oversize S/Adhesive	1
69	210704	Decal Caution Moving Parts	3
70	210908-1	Decal Red Reflector	4

Page Intentionally Blank

Bearing Tube Assy – Spinner Mount

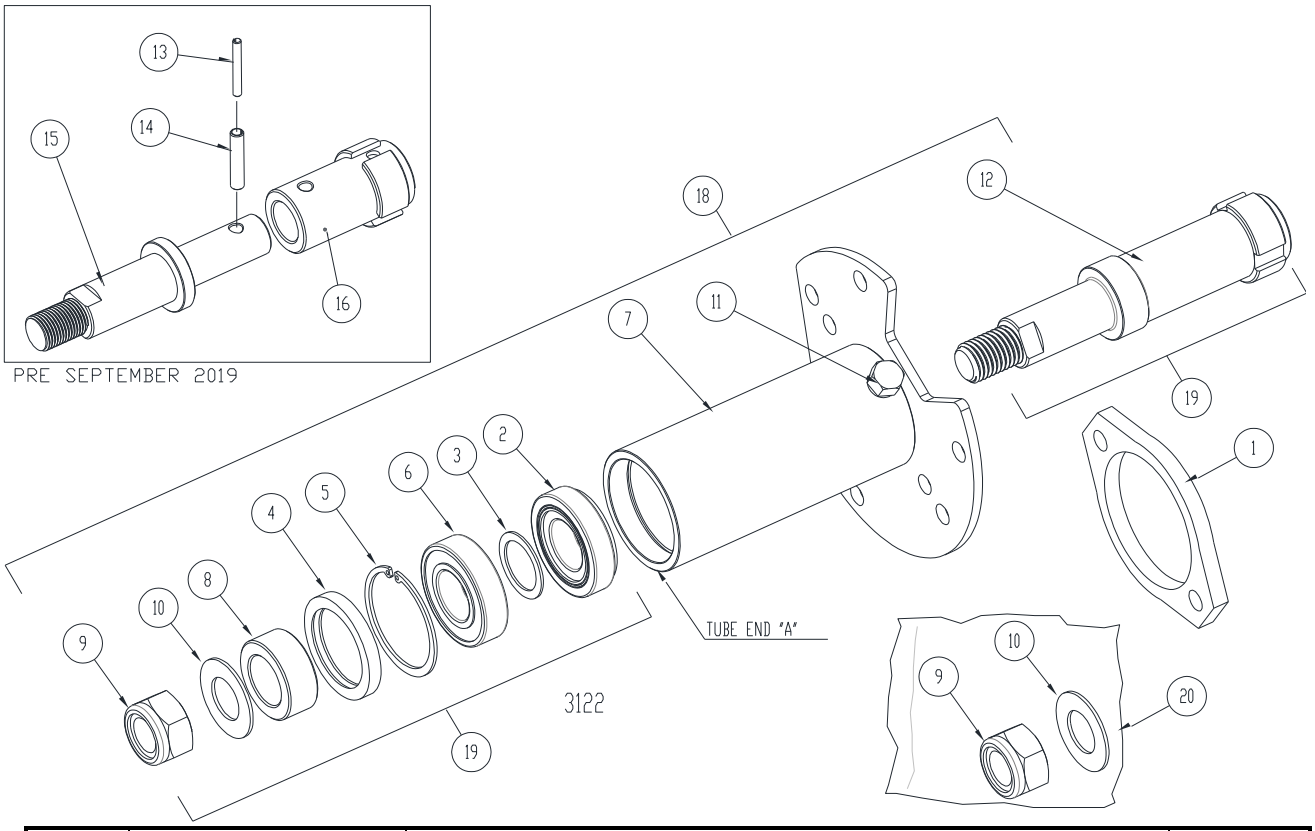

ITEM	PART NUMBER	DESCRIPTION	QTY.
1	233267	Spacer - Plastic	1
2	233740	Brg-Taper Roller	1
3	233743	Shim	1
4	233747	Lower Seal	1
5	233748	Circlip	1
6	233749	Brg-Deep Groove	1
7	233872	Weld Assy-L/H Spinner Tube (Shown)	1
	233873	Weld Assy-R/H Spinner Tube (Opposite Hand)	1
8	233915	Spacer	1
9	904905	Nut Nyloc M24	1
10	906901	Washer Flat 1" X 1-7/8"X14g Z/P	1
11	233746	Sensor Plug 3/8" BSPT	1
12	236372	Shaft Spinner Mnt Motor Drive	1
13	206125	Roll Pin 5 x 40mm (Pre Sept 2019)	1
14	233920	Roll Pin Dia.8 x 40mm (Pre Sept 2019)	1
15	233741	Shaft-Spinner Mnt (Pre Sept 2019)	1
16	233742	Coupler (Pre Sept 2019)	1
17	804439	Grease Mobil Special Xhp 222 or Similar (Not Shown)	
18	233902	Bearing Tube Assembly-L/H Spinner (Shown)	Ref.
	233903	Bearing Tube Assembly-R/H Spinner (Opposite Hand)	Ref.
19	237173	Spinner Shaft Kit-Brg's, spacers & seals included	Ref.
20	233985	Kit – Spare Spinner Nut M24	Ref.

Centre Vee - WideSpread

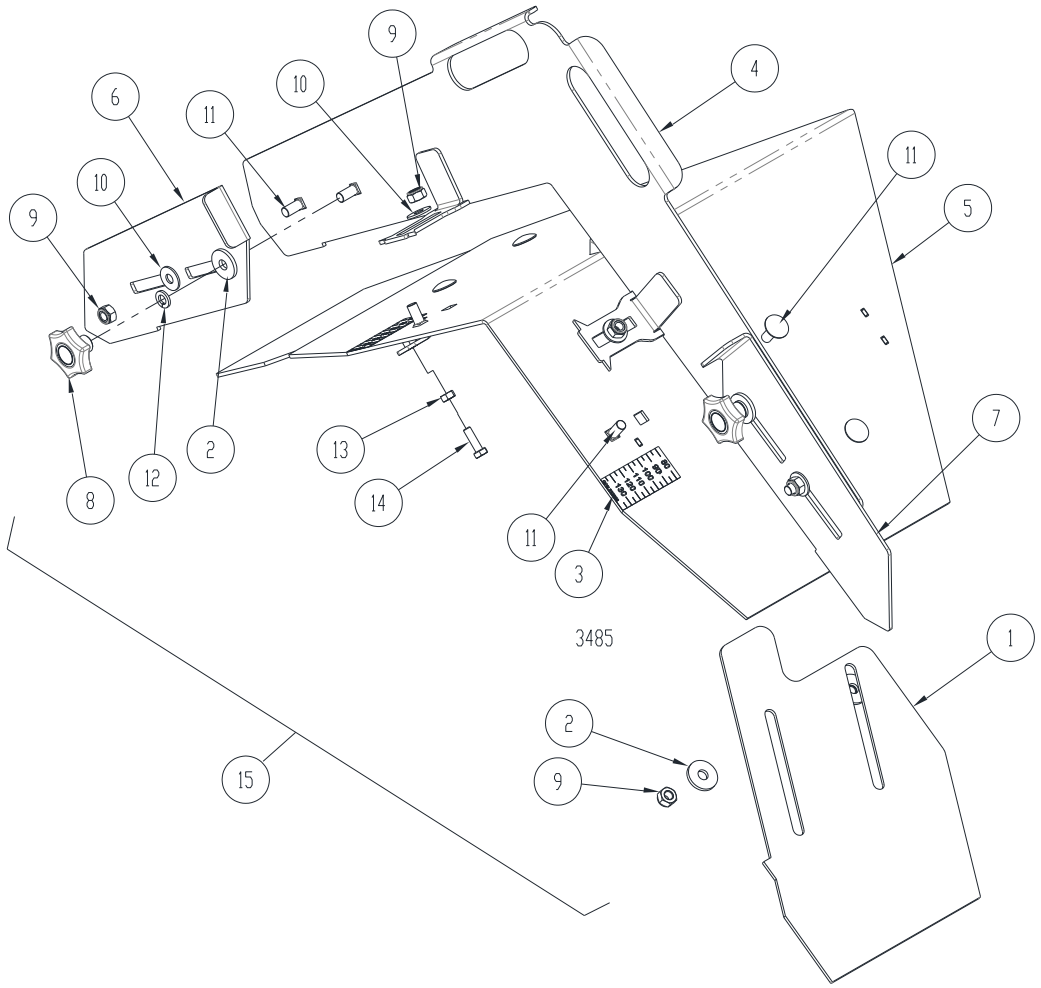

ITEM	PART NUMBER	DESCRIPTION	QTY.
1	233273	Panel – Side Adjustment	2
2	233744	Washer Flat S/S M8 x 25 x 3mm	6
3	233996	Decal – Back Board Indicator	2
4	234065	Rear Vertical Panel	1
5	234066	Base Panel	1
6	234067	Rear Slide Panel L/H	1
7	234068	Rear Slide Panel R/H	1
8	234075	Hand Knob	2
9	903305	Nut Nyloc M8 S/S	8
10	907414	Washer Flat S/S 8x20x1.6	4
11	926305	M8 x 20 Coach Bolt S/S	10
12	909006	Washer Spring M8 S/S	2
13	902201	Nut Nyloc M6 Hex S/S	4
14	917204	Screw Set M6 x 20 S/S	4
	917226	Screw Set M6 x 16 S/S	Ref.
15	233272	Centre Vee Assy - WideSpread	Ref.

Spinner Assembly – WideSpread Disc

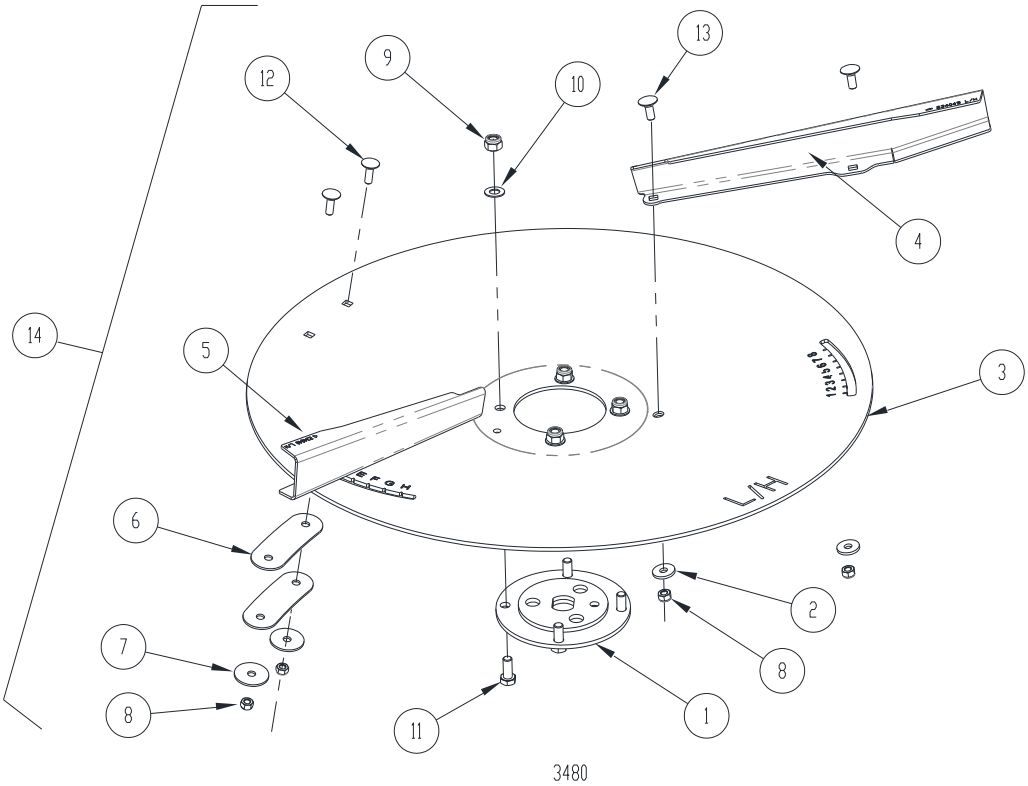

ITEM	PART NUMBER	DESCRIPTION	QTY.	
			L/H	R/H
1	233352	Mount Plate Assy - Spinner	1	1
2	233744	Washer Flat S/S M8 x 25 x 3mm	4	4
3	234037	Disc – WideSpread L/H	1	-
	234038	Disc – WideSpread R/H	-	1
4	234045	Fin Long – 33mm L/H	1	-
	234046	Fin Long – 33mm R/H	-	1
5	234040	Fin Medium – L/H	1	-
	234042	Fin Medium – R/H	-	1
6	234056	Counterweight – 90g	2	2
7	234057	Counterweight – 20g	2	2
8	903305	Nut Nyloc M8 S/S	6	6
9	903409	Nut Nyloc M10 S/S	4	4
10	907417	Washer flat M10 x 21 x 1.2 S/S	4	4
11	917421	Screw Set M10 x 25 S/S	4	4
12	926304	Coach Bolt M8 x 25 S/S	2	2
13	926305	Coach Bolt M8 x 20 S/S	4	4
14	234035	Spinner Assy – 890 WideSpread L/H	Ref.	-
	234036	Spinner Assy – 890 WideSpread R/H	-	Ref.
15	237161	Fin Kit – Complete Set of fins and Fasteners (not shown)	Ref.	Ref.

Spinner Assembly – General Purpose Disc

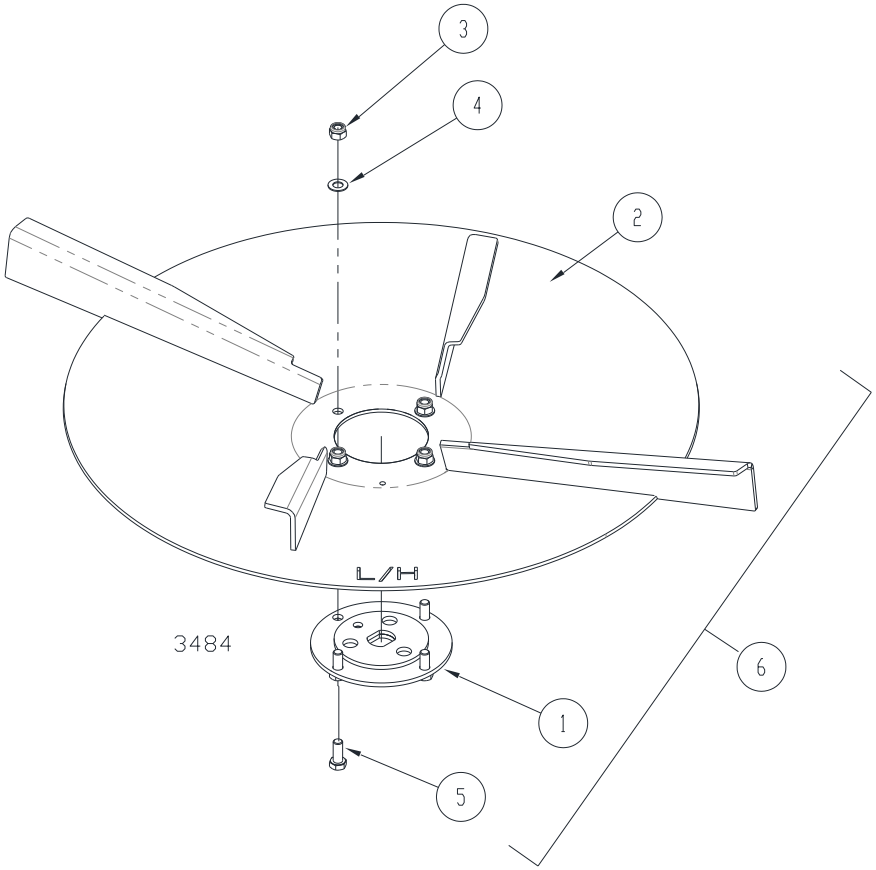

ITEM	PART NUMBER	DESCRIPTION	QTY.	
			L/H	R/H
1	233352	Mount Plate Assy - Spinner	1	1
2	234033	Disc – General Purpose L/H	1	-
	234034	Disc – General Purpose R/H	-	1
3	903409	Nut Nyloc M10 S/S	4	4
4	907417	Washer flat M10 x 21 x 1.2 S/S	4	4
5	917421	Screw Set M10 x 25 S/S	4	4
6	234043	Spinner Assy 890 L/H General Purpose	Ref.	-
	234044	Spinner Assy 890 R/H General Purpose	-	Ref.

Non-Braked Axle Assembly 9 & 12T

Titan's axle identified by the cast dust cap that is screwed onto the axle hub.

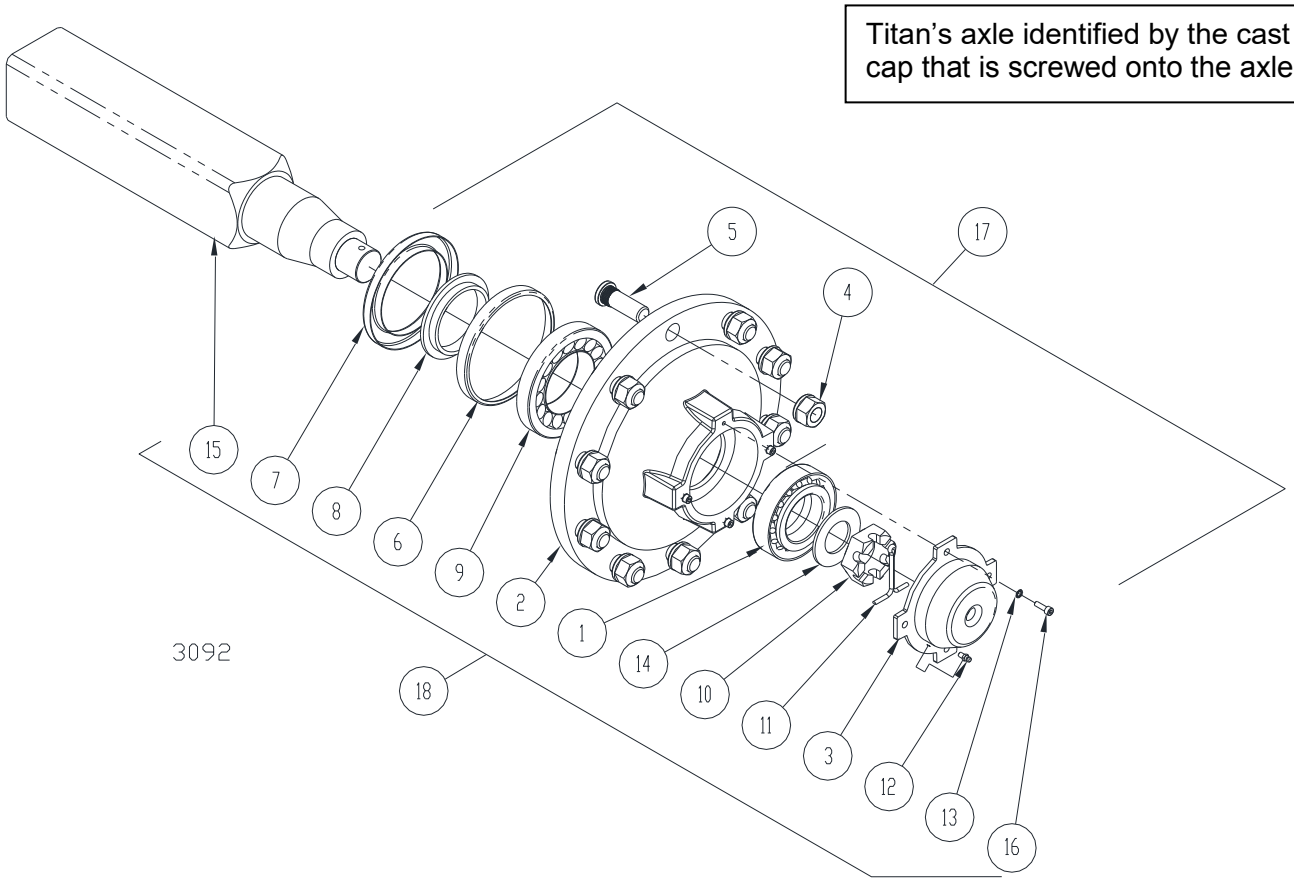

Non-Braked Axle Assembly 9 & 12T

ITEM	PART NUMBER	DESCRIPTION	QTY.	
			9T	12T
1	220766	Bearing Outer	1	-
	210070	Bearing Outer	-	1
2	234632	Hub Machined 90 Series 10 Stud	1	-
	214694	Hub Machined 100 Series 10 Stud	-	1
3	220767	Dust Cap	1	-
	214697	Dust Cap Bolt-on	-	1
4	214699	Wheel Nut M22 x 1.5P Hex	10	10
5	214700	Stud Wheel M22 x 1.5P	10	10
6	220771	Wear Ring	1	-
	214701	Wear Ring	-	1
7	220764	Triple Lip Seal	1	-
	214702	Triple Lip Seal	-	1
8	220772	Seal Ring	1	-
	214703	Seal Ring	-	1
9	220413	Bearing Inner	1	-
	210068	Bearing Inner	-	1
10	214695	Nut Slotted M45x2	1	1
11	214696	Pin Split 8x75	1	1
12	220741	Nipple Grease 6mm	1	1
13	220769	Washer M6 Rib Lock	4	4
14	220770	Washer 1-3/4” GR8	1	1
15	221041	Axle Stub Machined 90mm	1	-
	221042	Axle Stub Machined 100mm	-	1
16	932204	Screw Cap M6 x 20 Socket Head ZP	4	4
17	234631	Hub Kit-90 Series (Not Shown)	Ref.	-
	220730	Hub Kit 100 series (Not Shown)	-	Ref.
18	233895	Axle Assy SQ 90mm - 10 Stud (Not Shown)	Ref.	-
	212215	Axle Assy SQ 100mm - 10 Stud (Not Shown)	-	Ref.

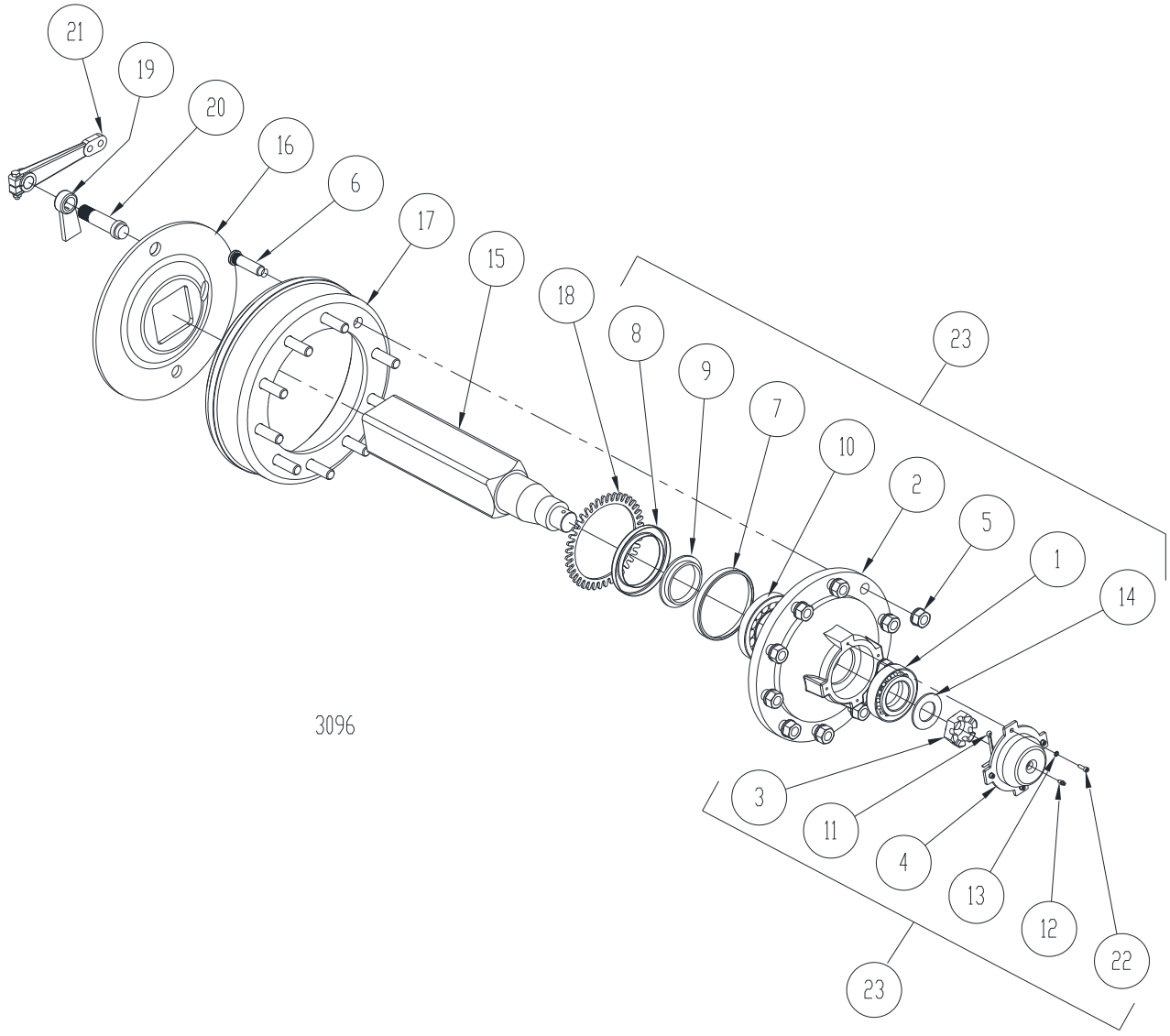
21
19
20
16
6
17
15
18
8
9
7
10
2
5
1
14
23
3
11
4
13
12
22
23
3096

Braked Axle Assembly 9T

ITEM	PART NUMBER	DESCRIPTION	QTY.
1	220766	Bearing Outer	1
2	234632	Hub Machined 90 Series 10 Stud	1
3	220417	Nut Slotted M45x2	1
4	220767	Dust Cap	1
5	214699	Wheel Nut M22 x 1.5P Hex	10
6	214700	Stud Wheel M22 x 1.5P	10
7	220771	Wear Ring	1
8	220764	Triple Lip Seal	1
9	220772	Seal Ring	1
10	220413	Bearing Inner	1
11	214696	Pin Split 8x75	1
12	220741	Nipple Grease 6mm	1
13	220769	Washer M6 Rib Lock	4
14	217232	Washer 1-3/4” GR8	1
15	221041	Axle Stub Machined 90mm	1
16	231016-02	Brake Drum Backing Plate	1
17	231016-03	Brake Drum	1
18	234402-02	Disc Speed Target – 90mm Sq Axle	1
19	231016-06	Support Arm	1
20	231016-07	Shaft Actuation - Splined	1
21	231016-08	Arm Actuation	1
22	932204	Screw Cap M6 x 20 Socket Head ZP	4
23	234631	Hub Kit-90 Series 10Stud Axle	Ref.
24	234402	Axle Assy SQ 90mm - 10 Stub (Not Shown) Bare.	Ref.
25	233892-01	Axle Assy 9T -Ctr’s- Braked (Not Shown) Ready to mount.	Ref.

Braked Axle Assembly 12T Option

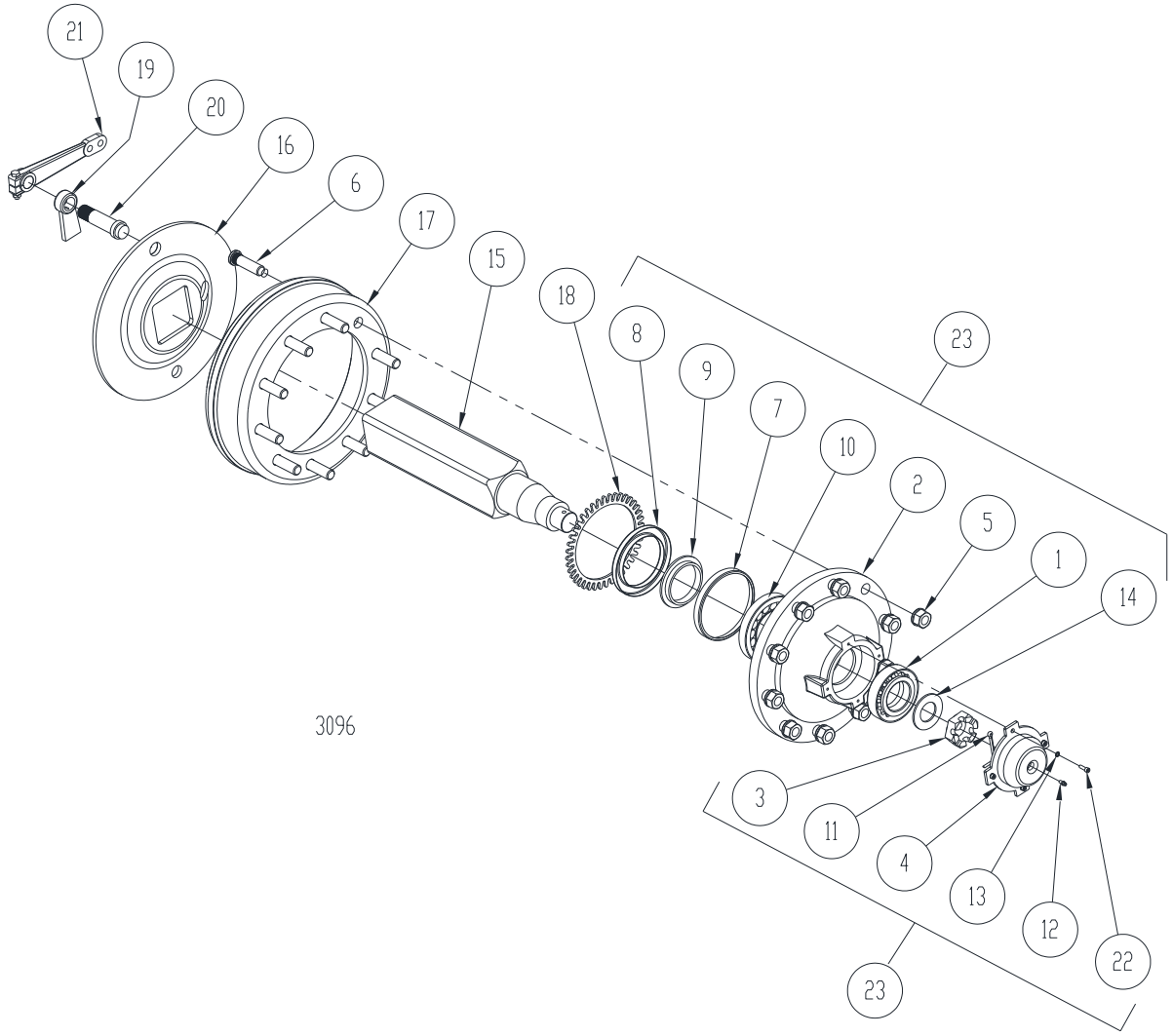

Braked Axle Assembly 12T Option

ITEM	PART NUMBER	DESCRIPTION	QTY.
1	210070	Bearing Outer	1
2	214694	Hub Machined 100 Series 10 Stud	1
3	214695	Nut Slotted M45x2	1
4	214697	Dust Cap Bolt-on	1
5	214699	Wheel Nut M22 x 1.5P Hex	10
6	214700	Stud Wheel M22 x 1.5P	10
7	214701	Wear Ring	1
8	214702	Triple Lip Seal	1
9	214703	Seal Ring	1
10	210068	Bearing Inner	1
11	214696	Pin Split 8x75	1
12	220741	Nipple Grease 6mm	1
13	220769	Washer M6 Rib Lock	4
14	220770	Washer 1-3/4” GR8	1
15	221042	Axle Stub Machined 100mm	1
16	231016-02	Brake Drum Backing Plate	1
17	231016-03	Brake Drum	1
18	231016-04	Disc Speed Target – 100mm Sq Axle	1
19	231016-06	Support Arm	1
20	231016-07	Shaft Actuation - Splined	1
21	231016-08	Arm Actuation	1
22	932204	Screw Cap M6 x 20 Socket Head ZP	4
23	220730	Hub Kit	Ref.
24	231016	Axle Assy SQ 100mm - Stub Braked (Not Shown) Bare.	Ref.
25	230997-01	Axle Assy 12T -Ctr’s- Braked (Not Shown) Ready to mount.	Ref.

Ground Drive Gearbox Components

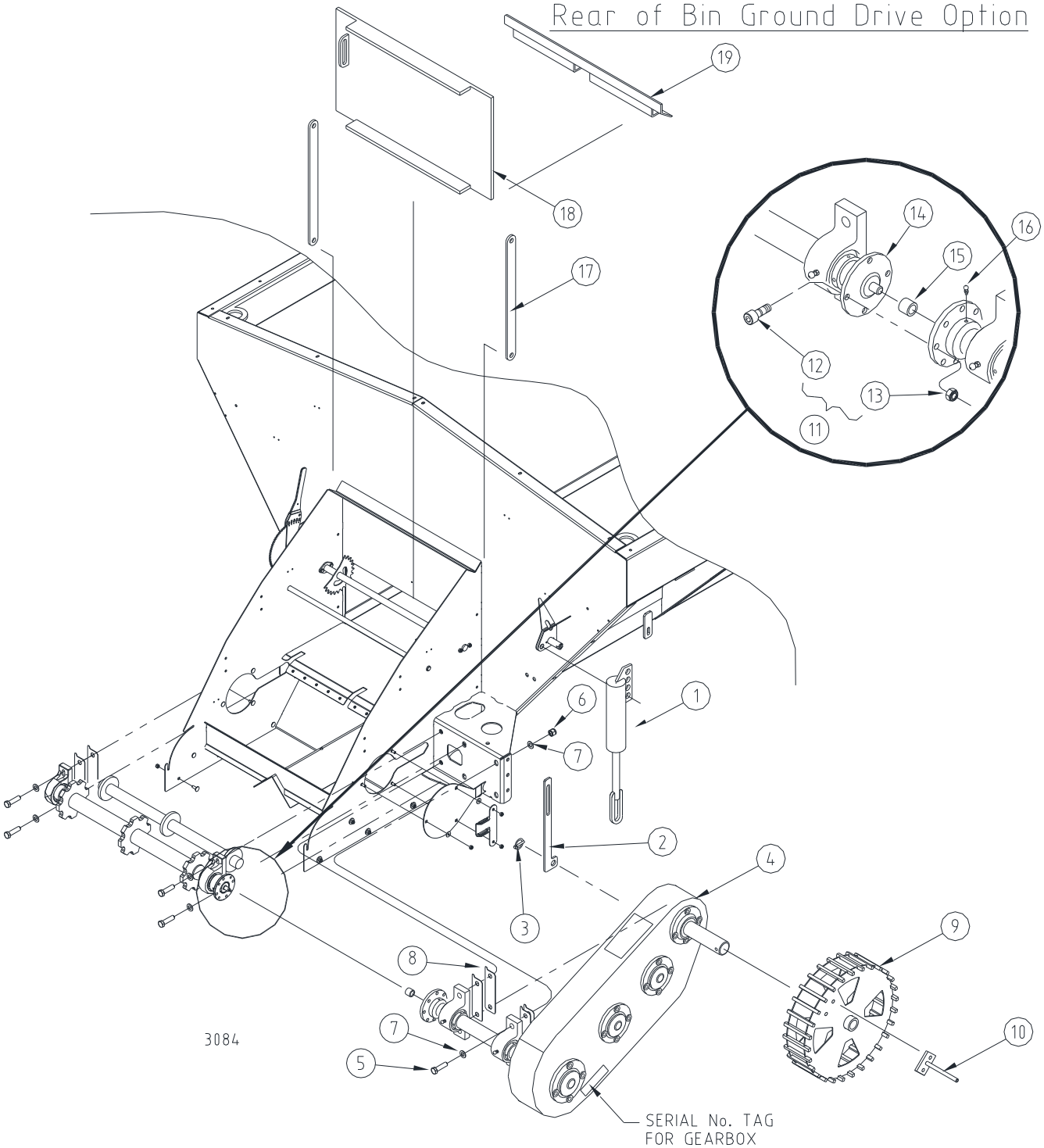

ITEM	PART NUMBER	DESCRIPTION	QTY.
		Hydraulic Cylinder Mounting	
1	211131	Cylinder Hyd. 1.5” x 80mm	1
	907408	Washer Flat 21 x 37 x 1.6 (Not Shown)	2
	903931	Nut Nyloc M20 (Not Shown)	1
	913702	Bolt M20 x 50 (Not Shown)	1
		Transport Lock – Gearbox	
2	220652	Link (suits low ratio series 2 gearbox)	1
3	207167	Lynch Pin 4.5mm Dia.	1

ITEM	PART NUMBER	DESCRIPTION	QTY.
	207451	Pin Disengaging (Not Shown)	1
	207146	Spring (Not Shown)	1
	207410	Roll Pin Ø5 x 70mm Lg (Not Shown)	1
	907415	Washer Flat (Not Shown)	2
		Bearings and Gearbox To Main Body	
4	215080	Gear Box Assy. Low Ratio Series 2	1
5	917712	Screw Set M16 x 60	4
6	903930	Nyloc Nut M16	4
7	812588	Washer Flat M16 Struct. Gal	8
8	231094	Shim Bearing Packer 1.6mm	4
		Note: Part & Serial No. of gearbox will be stamped on the	
		RH Side of the gearbox.	
		Rear Divider Panel	
		Jockey Wheel	
9	210978	Jockey Wheel Steel	1
	913417	Bolt M10 x 60 (Not Shown)	1
	903406	Nut Nyloc M10 (Not Shown)	3
	917403	Screw Set M10 x 25 (Not Shown)	2
	800894	Washer Flat 10 x 19 x 1.5 (Not Shown)	2
10	213555	Handle – Wheel Calibration	1
11	234105	Drive Bolt Kit (Includes 4 Special Bolts & Nuts)	1
12	234103	Drive Bolt	4
13	903407	Nut Nyloc M10	4
14	214367	Drive Plate – Feed Chain	1
15	220368	Bush – Gearbox Shaft	1
16	955001002	Grease Nipple – 1/4” UNF	1
		Rear Door Guides	
17	211474	Strip Door Guide	2
	917310	Screw Set M8 x 30 (Not Shown)	4
	903302	Nut Nyloc M8 (Not Shown)	4
	902401	Nut M10 (Not Shown)	4
	8001368	Washer Flat 8 x 17 x 2 (Not Shown)	8
18	210877	Rear Door	1
		Door Cutter	
19	213617	Plate Door Cutter (For 16mm Slat Chain)	1
	926306	Bolt Coach M8 x 20 (Not Shown)	5
	8001368	Washer Flat 8 x 17 x 2 (Not Shown)	5
	903302	Nut Nyloc M8 (Not Shown)	5

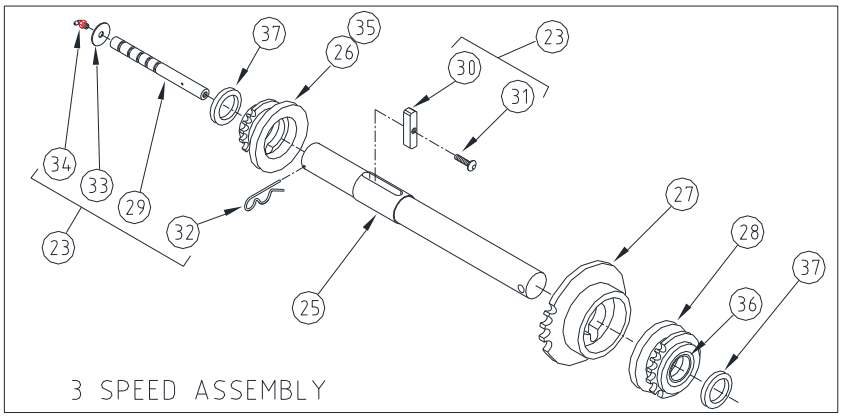

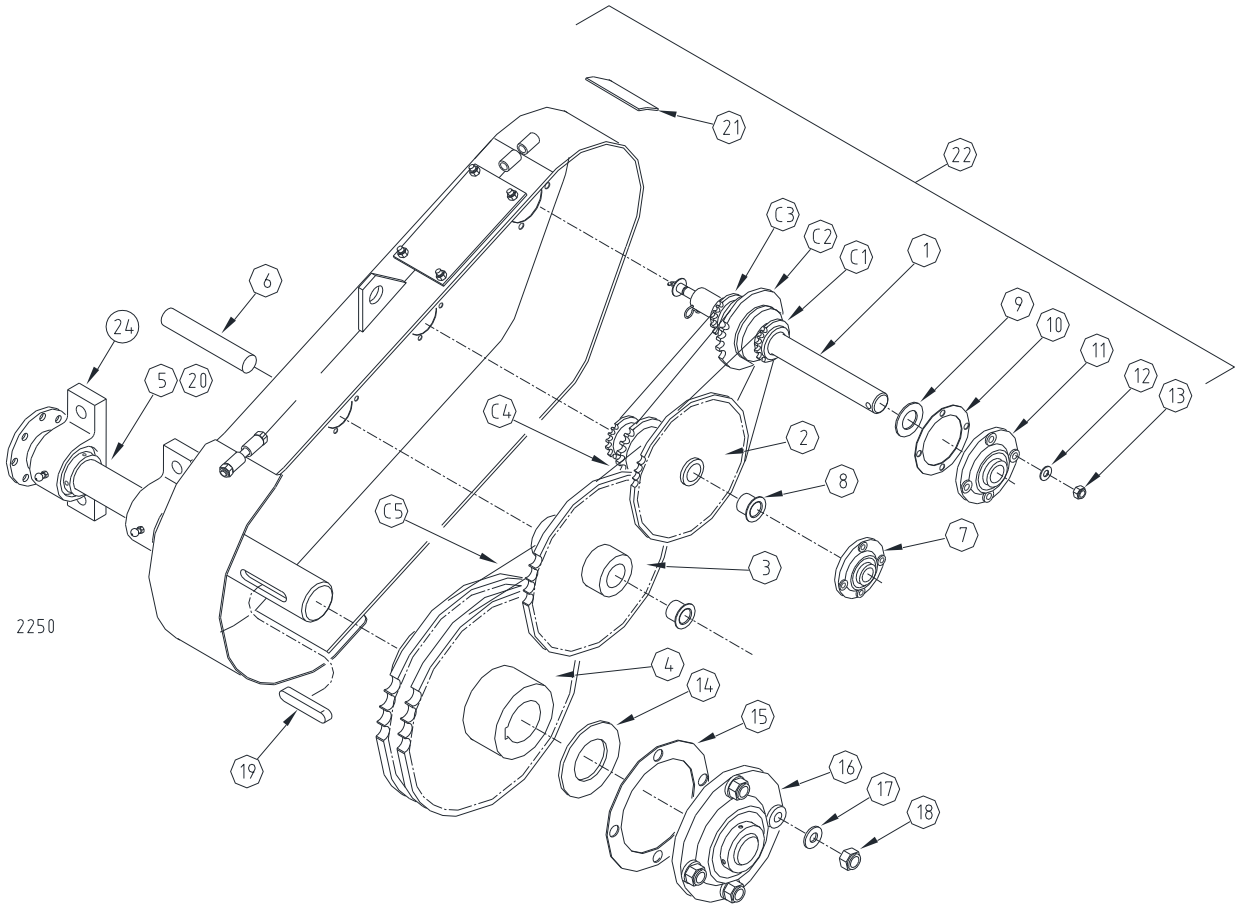

ITEM	PART NUMBER	DESCRIPTION	QTY.
1	216095	3 Speed Gear Shift Assembly	1
2	216673	Quad Group Sprocket Assembly	1
3	216675	Final Group Sprocket Assembly	1
4	216676	Output Sprocket Assembly	1
5	220453	Output Shaft Assembly (Includes Bearings & Bush)	1
6	215144	Shaft Idler	2
7	215143	Bearing-Idler Shafts	4
8	210958	Bush	4
9	214541	Spacer – Internal Top Brg.	Ref.
10	215479	Spacer – External Top Brg.	Ref.
11	210708	Bearing – Top shaft	2

ITEM	PART NUMBER	DESCRIPTION	QTY.
12	800894	Washer Flat M10	8
13	903407	Nyloc Nut M10	8
14	211226	Spacer – Internal Lower Brg. 3mm	Ref.
	228288	Spacer - Internal Lower Brg. 1.6mm	Ref.
15	214542	Spacer – External Lower Brg. 1.2mm	Ref.
	214543	Spacer – External Lower Brg. 1.6mm	Ref.
	214544	Spacer – External Lower Brg. 2mm	Ref.
16	210697	Bearing – Lower Shaft	2
17	906604	Washer Flat M12	8
18	903605	Nyloc Nut M12	8
19	211124	Key – Output Shaft	1
20	227422	Output Shaft (No Bearings)	Ref.
21	210837	Decal 3 Speed Ratio	1
22	215080	Gearbox Assembly Low Ratio Series 2	Ref.
23	237392	Pin Assy-Selector (Inc. items 29 – 34)	Ref.
24	210699	Bearing Pillow Block	2
		3 Speed Gear Shift Assembly	
25	220476	Shaft – 3 Speed Assembly	Ref.
26	214553	Sprocket – 17T Medium Ratio	1
27	214552	Sprocket – 25T High Ratio	1
28	217158	Sprocket – 16T Low Ratio	1
29	220475	Pin – Sprocket Ratio Selector	1
30	220477	Key – Sprocket Drive	1
31	922322	Screw Cap Butt.Hd M5 x 20	1
32	216756	Clip – ‘R’	1
33	907201	Washer – M6	1
34	209338	Nipple – Grease M6 x 90 Deg.	1
35	214558	Bearing 17T Sprocket	1
36	217160	Bearing 16T Sprocket	1
37	214557	Spacer	2
		Chain & Links	
C1	210772	Chain - Low Speed 1/2”	Ref.
	214284	Joiner - Rivet (not shown)	Ref.
C2	214275	Chain - High Speed 5/8”	Ref.
	214285	Joiner - Rivet (not shown)	Ref.
C3	210772	Chain - Medium Speed 1/2”	Ref.
	214284	Joiner - Rivet (not shown)	Ref.
C4	214275	Chain - Intermediate Drive 5/8”	Ref.
	214285	Joiner - Rivet (not shown)	Ref.
C5	215935	Chain – Final Drive Duplex 3/4”	Ref.
	215842	Link – Duplex Joiner (not shown)	Ref.
	215080	Gearbox Assembly – Low Ratio Series 2	Ref.

Ground Drive Tachometer

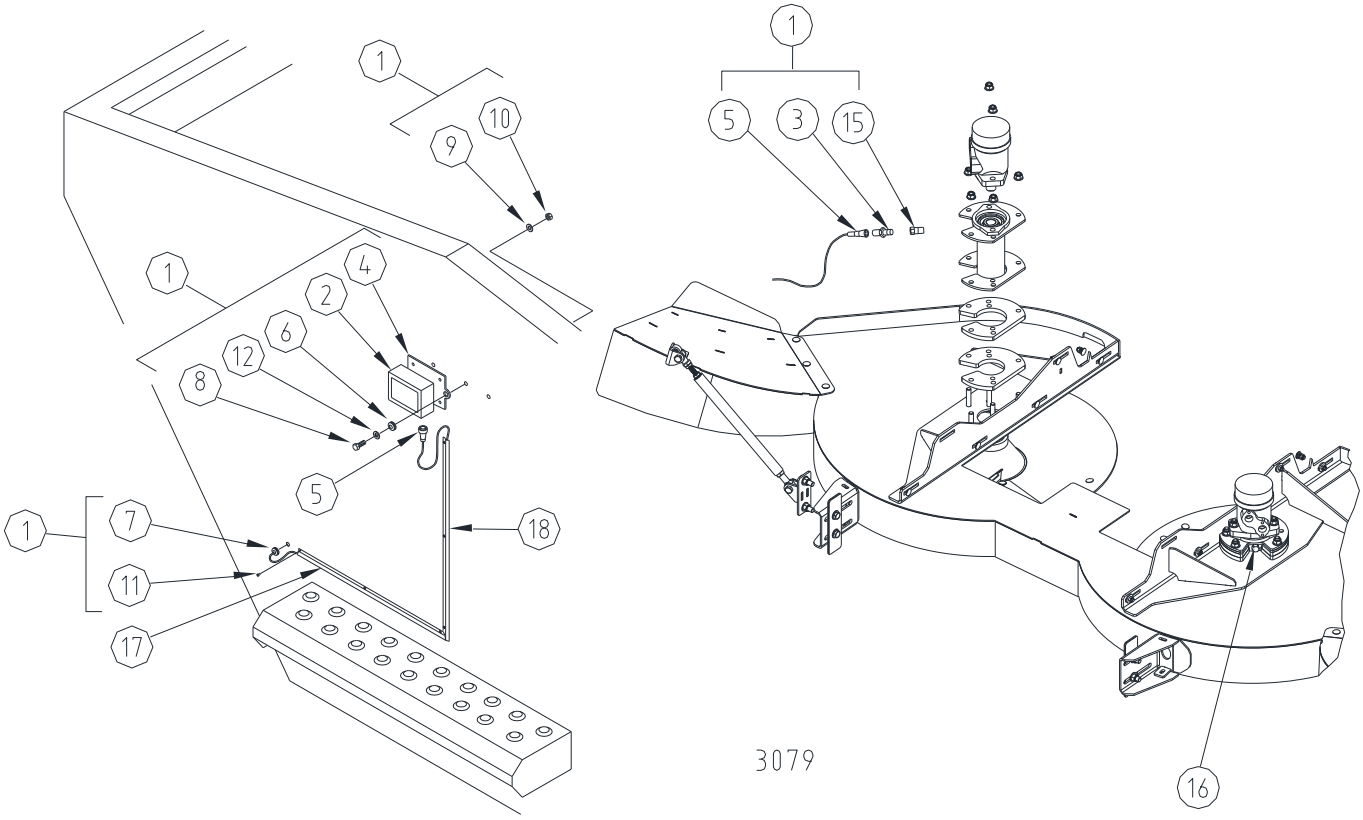

ITEM	PART NUMBER	DESCRIPTION	QTY.
1	233911	Tachometer Kit Spinner post Nov17 (includes items 2-14)	Ref.
2	229003	Tacho Display-co400 (Replaceable Battery)	1
	229394	Battery- 'AA' 3.6V Lithium	Ref.
3	233905	Sensor M12x1P – Spreader Tacho	1
4	229019	Mount Bracket	1
5	234716	Cable Ext. 7m-St x St 4 Pole	1
6	800698	Grommet Rubber EG19	2
7	801124	Grommet EG36	1
8	917214	Screw Set M6 x 20 S/S	2
9	907204	Washer Flat S/S 6x13x1.2	2
10	903204	Nut Nyloc M6 S/S	2
11	210776	Rivet Blind S/S 4.8mm	6
12	906201	Washer Flat 1/4x3/4x16g Z/P	2
13	232038	Tie Cable-Black Nylon 300	12
14	234865	Tacho Fitment Instructions (Not Shown)	1
15	233745	Adaptor (plastic)–Spinner Sensor	1
16	233746	Sensor Plug 3/8" BSPT	1
17	210817	Cover Tacho Loom Short	1
18	210816	Cover Tacho Loom Long	1
19		Adaptor – Spinner Sensor	1
20	205158	Silicone Grease (waterproofing for cover seal)	Ref.

VRT Spinner Sensor & Blanking Fasteners

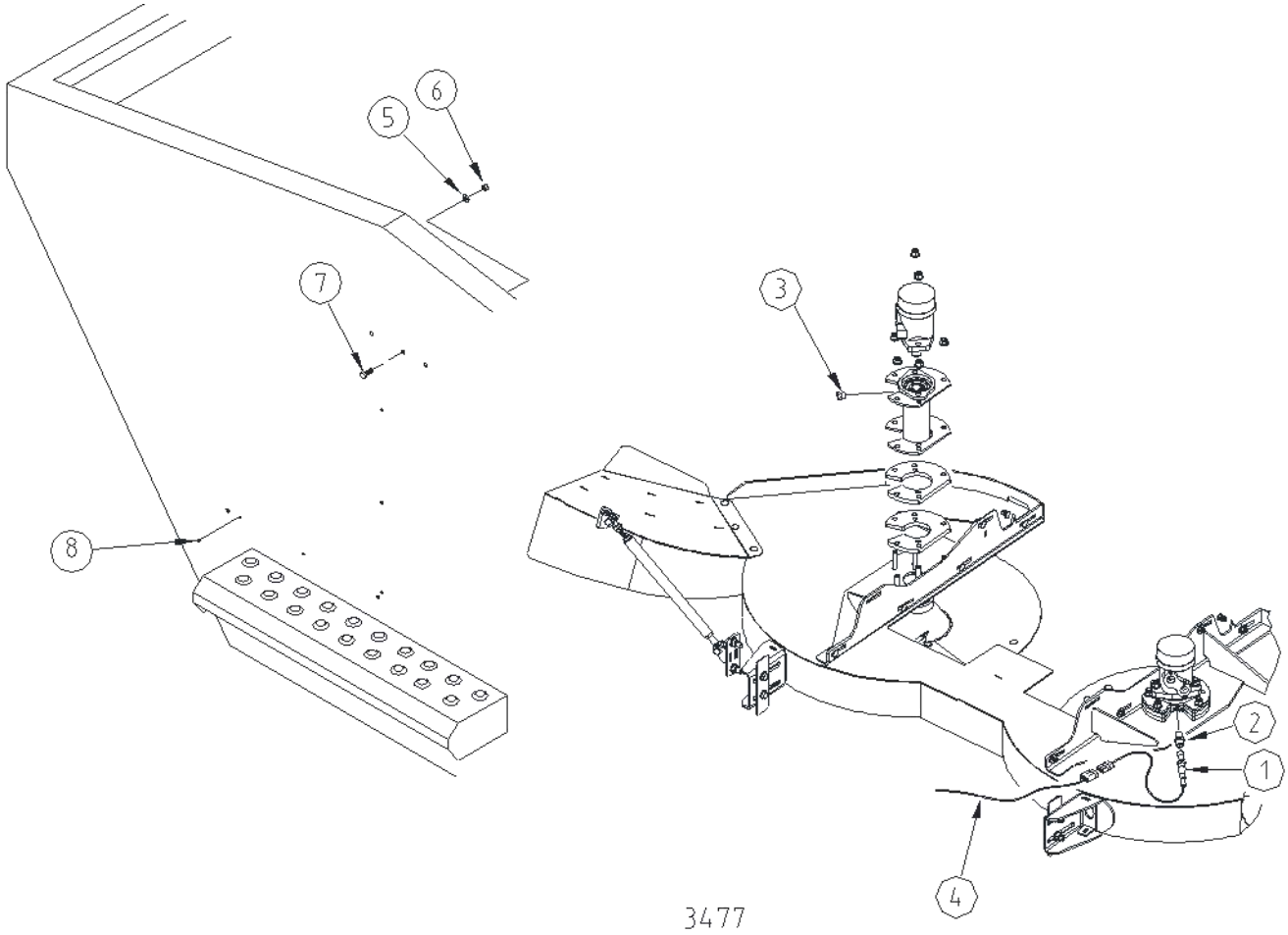

ITEM	PART NUMBER	DESCRIPTION	QTY.
1	210666	Sensor-Spinner rpm	1
2	234073	Adaptor	1
3	233746	Sensor Plug 3/8” BSPT	1
4	213295	Cable Extension 5m	Ref.
5	907208	Washer Flat S/S 6x13x1.2	2
6	903204	Nut Nyloc M6 S/S	2
7	917217	Screw Set M6 x 12 S/S	2
8	210776	Rivet Blind S/S 4.8mm	6
9			
10			

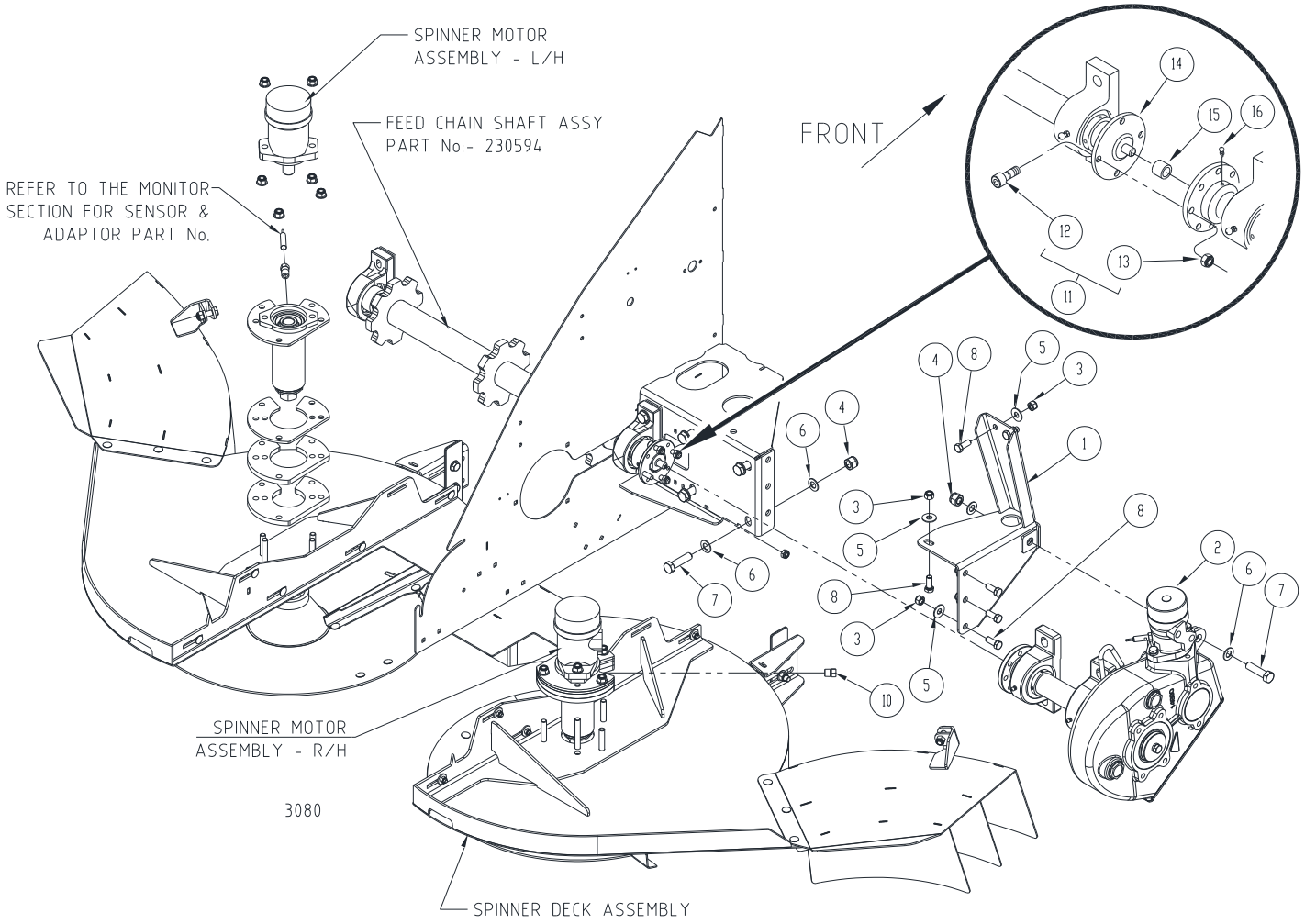

ITEM	PART NUMBER	DESCRIPTION	QTY.
1	231048	Support Assembly-Torque Arm	1
2	231049	Gearbox & Shaft Assembly-VRT Drive	1
3	903605	Nut Nyloc M12 CL8 AS1285	6
4	903930	Nut Nyloc M16 CL8	5
5	906601	Washer Flat 1/2” x 1-1/4" x 16G Z/P	6
6	812588	Washer Flat M16 Struct. Galv	10
7	917712	Screw Set M16x60 GR8.8 Hex Z/P	5
8	917602	Screw Set M12x30x1.75 Gr.8.8	6
9			
10	233746	Sensor Plug 3/8” BSPT	1
11	234105	Drive Bolt Kit (Includes 4 Special Bolts & Nuts)	1
12	234103	Drive Bolt	4
13	903407	Nut Nyloc M10	4
14	214367	Drive Plate – Feed Chain	1
15	220368	Bush – Gearbox Shaft	1
16	955001002	Grease Nipple – 1/4” UNF	1

VRT Gearbox & Shaft Assy

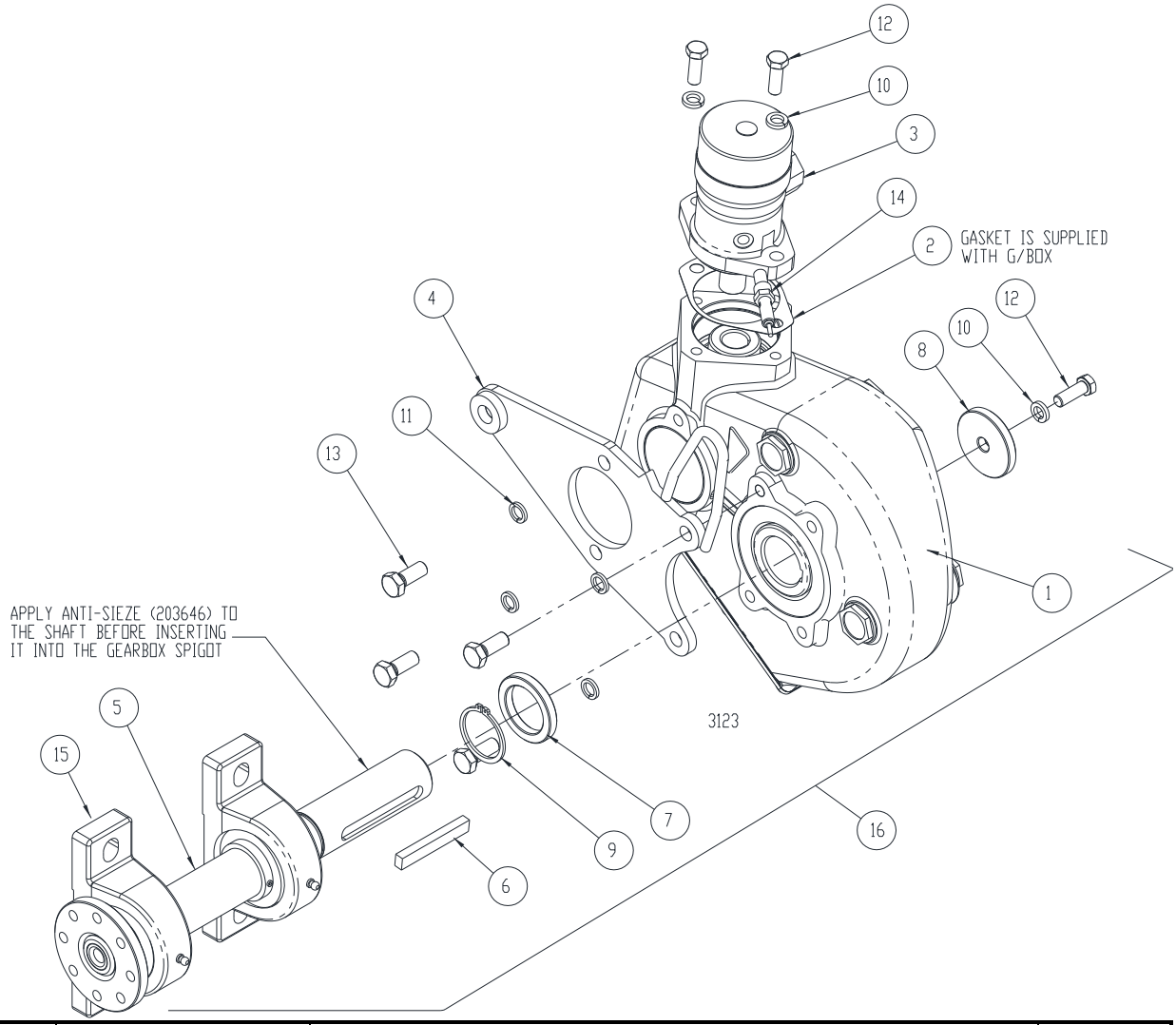

ITEM	PART NUMBER	DESCRIPTION	QTY.
1	230933	Gearbox-Reduction	1
2	233922	Gasket-Hyd. Motor to Gearbox	1
3	231045	Motor Hyd.100cc	1
	214302	Motor Hyd. Seal Kit	Ref.
4	231047	Arm - Torque Restraint	1
5	231086	Shaft Assy-Gearbox	1
6	231089	Key-14 X 9 X 90lg	1
7	231090	Collar - Drive Shaft	1
8	231091	End Cap - Shaft Retainer	1
9	231092	Circlip External 50mm H/Duty	1
10	908601	Washer Spring 1/2 X 5/32 X 3/32 Zp	3
11	908602	Washer Spring 9/16 X 1/8 X 1/8 Zp	4
12	913610	Bolt M12x35 Hex Z/P 8.8	3
13	913647	Bolt M14x35 Gr 8.8 Hex Zp	4
14	233940	Sensor - Hyd.Motor RPM	1
15	231093	Bearing Pillow Block	2
16	231049	Gearbox & Shaft Assy	Ref.

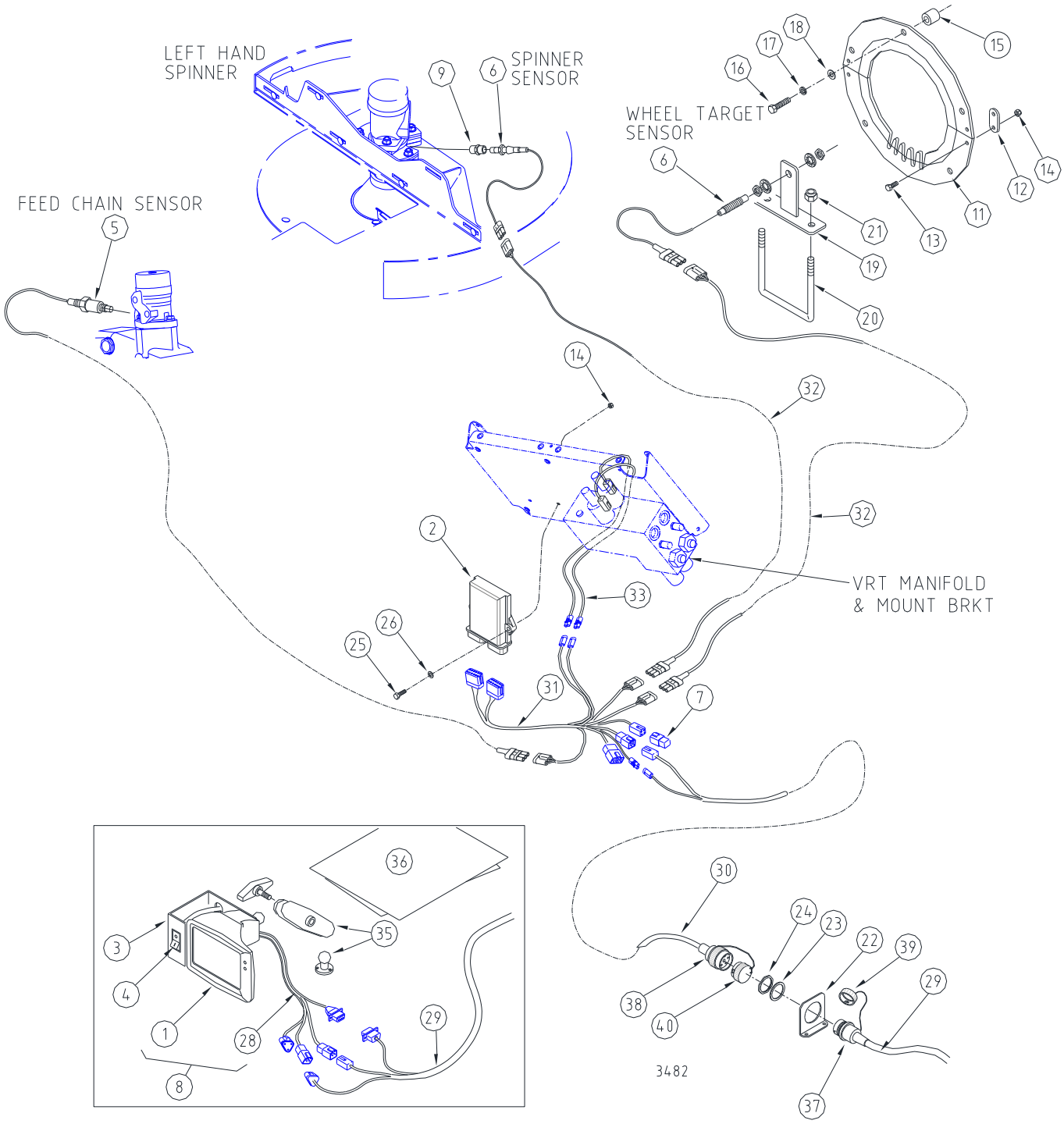

ITEM	PART NUMBER	DESCRIPTION	QTY.
1	232384	Monitor 7300 Display	1
2	233939	Unipod Spreader	1
3	231117	Switch Brkt	1
4	216588	Switch – Monitor Power	1
5	233940	Sensor – Feed Chain	1
6	210666	Sensor – Proximity (wheel & chain) 50mm lg	2

ITEM	PART NUMBER	DESCRIPTION	QTY.
7	232395	CANBUS Relay	1
8	233935	Monitor Kit – 7300 Display & Accessories	Ref.
9	234073	Adaptor – Spinner Sensor	1
10			
11	213831	Disc – Wheel Target Split 42P	2
12	213832	Tab Joiner – Split Target	2
13	917204	Screw Set M6 x 20	4
14	903202	Nut Nyloc M6	6
15	211690	Spacer Target Disc	5
16	917413	Screw Set M10 x 45	5
17	909005	Washer Spring M10 x 2.35	5
18	906404	Washer Flat 3/8 x 3/4	5
19	233991	Mount Brkt - Wheel Sensor	1
20	213801	U-Bolt M10 x 100 x 100	1
21	903406	Nut Nyloc M10	2
22	211988	Brkt – Deutsch Connector	1
23	212825	Washer Deutsch Connector	Ref.
24	212824	Nut Deutsch Connector	Ref.
25	913209	Screw Set M6 x 30	2
26	906201	Washer Flat M6	2
27			
28	232385	Loom – Power Switch	Ref.
29	233936	Loom – Tractor 7300	1
30	233937	Loom – Implement 7300	1
31	233938	Loom – Unipod Spreader	
32	213295	Loom – Extension 5m x 3 Core	2
33	233941	Loom Ext. – Spreader PWM	2
34			
35	232010	RAM Mount Components	Ref.
36	233942	Quick Reference Guide	1
37	238593	Receptacle Kit Female with Male Pins	Ref.
38	238594	Plug Kit Male with Female Pins	Ref.
39	212655	Dust Cap- Alum.	Ref.
40	238156	Dust Cap - Plastic	Ref.

Ground Drive Hydraulic Schematic Option

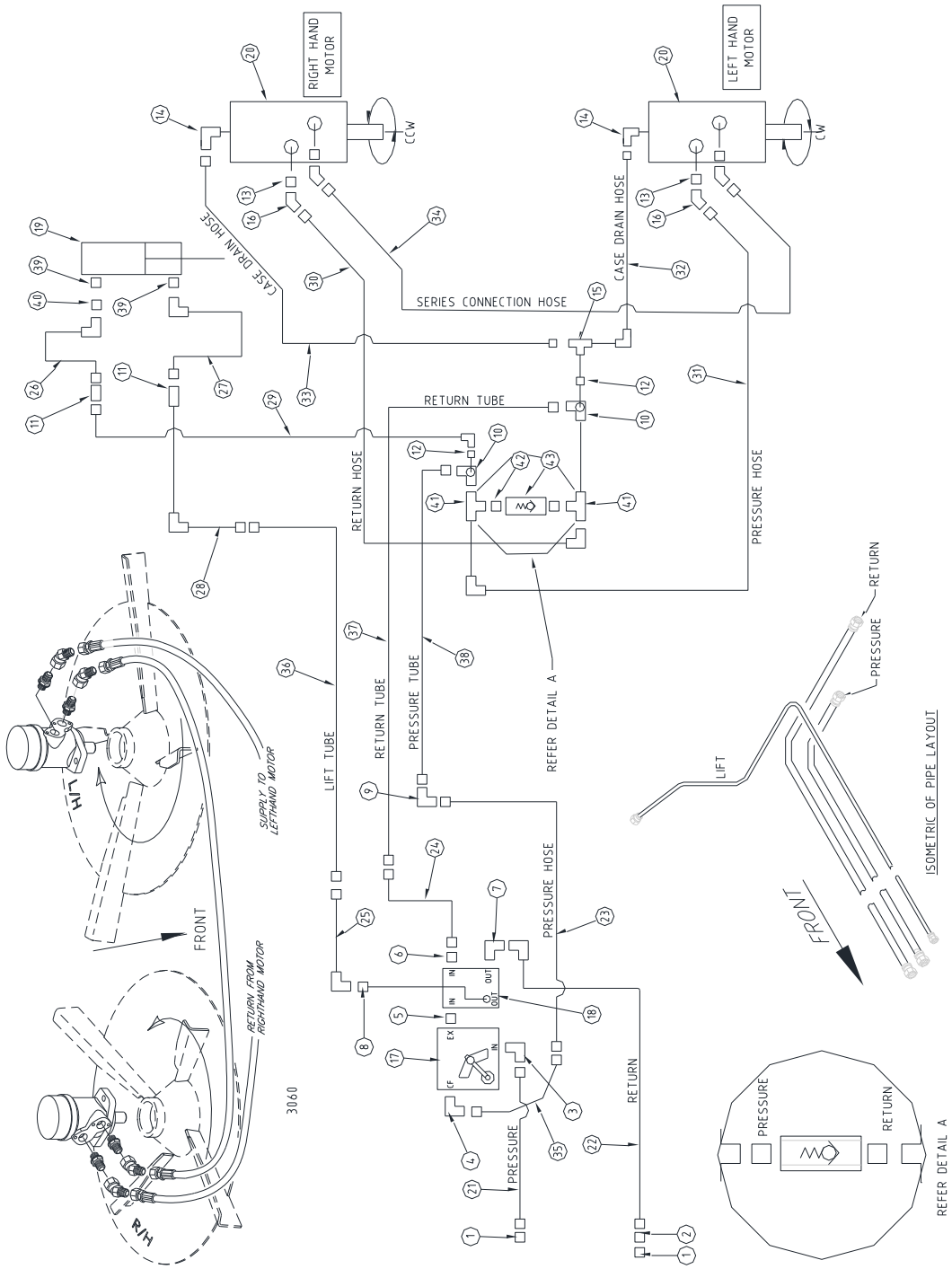

ITEM	PART NUMBER	DESCRIPTION	QTY.
1	804053	Fitting Hyd.- Nipple 1/2BSPT Q/REL.	2
2	210950	Fitting Hyd.- Nipple 3/4BSPPM x 1/2BSPTM	1
3	210954	Fitting Hyd.- Elbow 3/4BSPPM x 3/4BSPTM	1
4	206627	Fitting Hyd.- Elbow 3/4BSPPM x 3/4BSPTM	1

ITEM	PART NUMBER	DESCRIPTION	QTY.
5	210940	Fitting Hyd.- Nipple 3/4BSPPM x 3/4BSPTM	1
6	210942	Fitting Hyd.- Nipple 3/4BSPPM x 1-1/16JICM	1
7	210941	Fitting Hyd.- Elbow 3/4BSPPM x 1-1/16JICM	1
8	210943	Fitting Hyd.- Nipple 1/4BSPPM x 1/4BSPPM	1
9	210947	Fitting Hyd.- Elbow 1-1/16JICMM	1
10	210948	Fitting Hyd.- Elbow 1-1/16JICMM with hole	2
11	210946	Fitting Hyd.- Bulkhead 9/16JICMM	2
12	221658	Fitting Hyd.- Nipple 1/4 BSPTM x 9/16JICM	2
13	211509	Fitting Hyd.- Elbow 1/2BSPPM x 1-1/16JICM	4
14	229237	Fitting Hyd.- Elbow 1/4BSPPM x 9/16JICM	2
15	956007001	Fitting Hyd.- Tee 9/16JICMMF	1
16	217431	Fitting Hyd.- Elbow 1-1/16JICM-F 45°	4
17	211013	Flow Control Valve	1
18	211014	Check Valve	1
19	211131	Hyd. Cylinder- 1.5" Bore	1
	215279	Seal Kit for Cylinder	Ref.
20	229353	Hyd. Motor- 59cc (Post July 2013) staggered ports	2
	229352	Seal Kit (For field fitment. One kit required per motor.)	Ref.
21	210860	Hose 1/2 x 1/2BSPTM x 3/4BSPPF	1
22	210859	Hose 3/4 x 3/4BSPPF x 1-1/16JICF90°	1
23	230975	Hose 3/4 x 1-1/16JICF x 1-1/16JICM	1
24	230976	Hose 3/4 x 1-1/16JICF x 1-1/16JICM	1
25	230977	Hose 1/4 x 1/4BSPPF90° x 9/16JICM	1
26	210866	Hose 1/4 x 1/4BSPPF90° x 9/16JICF90°	1
27	210863	Hose 1/4 x 1/4BSPPF90° x 9/16JICF90°	1
28	210862	Hose 1/4 x 9/16JICF90° x 9/16JICM 90°	1
29	210867	Hose 1/4 x 9/16JICF90° x 9/16JICF	1
30	234979	Hose 3/4 x 1-1/16JICF x 1-1/16JICF	1
31	234980	Hose 3/4 x 1-1/16JICF x 1-1/16JICF 90°	1
32	234981	Hose 1/4 x 9/16JICF90° x 9/16JICF	1
33	234982	Hose 1/4 x 9/16JICF x 9/16JICF	1
34	234978	Hose 3/4 x 1-1/16JICF x 1-1/16JICF	1
	230993	Hose Kit Spreader	Ref.
35	210871	Tube Assembly- 3/4"O.D.	1
36	230974	Tube Assembly - 3/8"O.D.	1
37	230973	Tube Assembly - 3/4"O.D.	1
38	230972	Tube Assembly - 3/4"O.D.	1
	230994	Tube Kit Spreader	Ref.
39	211130	Fitting Hyd.- Nipple 9/16UNOx9/16JICM	2
40	229677	Restrictor 9/16” JICFM	1
41	208426	Fitting Hyd. - Tee 1-1/16 JICMFM	2
42	208568	Fitting Hyd. - Adaptor 3/4BSPPM x 1-1/16 JICF	2

ITEM	PART NUMBER	DESCRIPTION	QTY.
43	209694	Check Valve	Ref.
44	230994	Kit Hyd. Tube	Ref.
45	234983	Hyd. Circuit Drawing (Not Shown)	Ref.
46	230993	Kit Hyd. Hose (Not Shown)	Ref.

Hydraulic Hardware, Not shown on Drawing

ITEM	PART NUMBER	DESCRIPTION	QTY.
		Hydraulic Hose Stand (Drawbar)	
	211089	Spring Hose Stand	1
	913608	Bolt M12 x 30	1
	906601	Washer Flat 1/2” x 1-1/4” x 14g	2
	908604	Washer Spring 1/2” x 5/32” x 5/32”	1
		Valve To Frame	
	211116	Bracket Flow Control Stop	1
	917315	Screw Set M8 x 60	1
	8001368	Washer Flat M8 x 17 x 2	2
	903302	Nyloc Nut M8	1
	913218	Bolt M6 x 60	2
	206309	Washer Flat M6 X 12.5	3
	903202	Nyloc Nut M6	1
	908201	Washer Spring 1/4” x 1/16”	1
		Hose Clamps Trailer	
	208616	Clamp Pipe Single 9.5 mm	5
	205380	Clamp Pipe Double 19mm	5
	913213	Bolt M6 x 45 (Large Double Clamp)	5
	913209	Bolt M6 x 30 (Small Single Clamp)	4
	917203	Screw Set M6 x 25 (Small Single Clamp, Rear)	1
	206309	Washer Flat M6 x 12.5	9
	903202	Nut Nyloc M6	1
	908201	Washer Spring 1/4” x 1/16”	8
	211413	Plate Laser Cut	1
	207324	Pinch Weld Black 10 x 15 mm	0.2m

Page Intentionally Blank

VRT Hydraulic Schematic Option

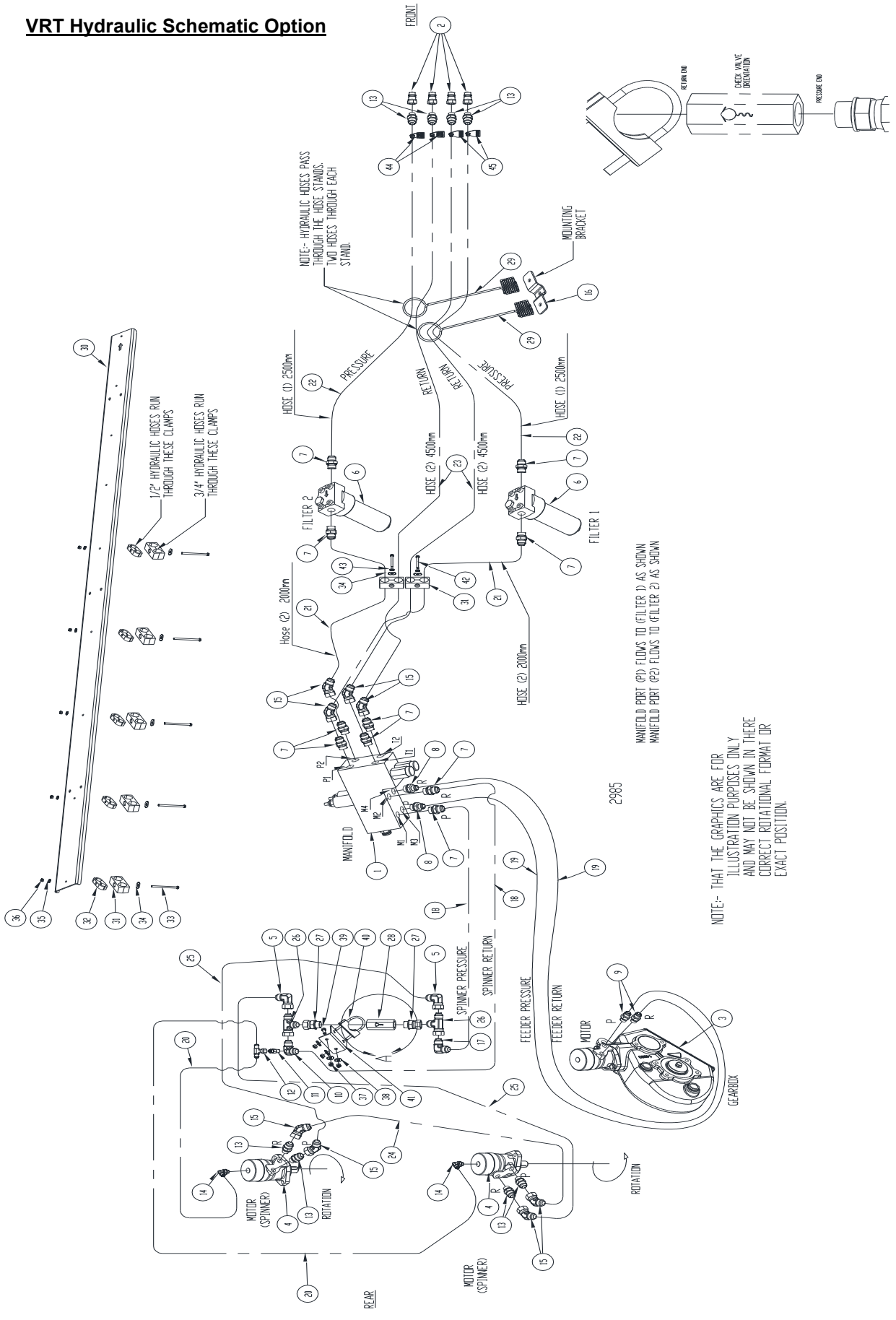

ITEM	PART NUMBER	DESCRIPTION	QTY.
1	233844	Manifold Assembly-Hydraulic VRT 2 Stat. Remote	1
2	233988	Nipple Quick Release 1/2” BSPP Poppet Type	4
3	231049	Gearbox & Shaft Assembly-VRT Drive Spreader	1
4	229353	Motor Hydraulic. 100cc-VRT Drive Spreader	2
	229352	Seal Kit (For field fitment. One kit required per motor.)	Ref.
5	208414	Elbow 1-1/16” JICMF 90 Deg	2
6	237010	Filter Hydraulic Filtrec F280 (Post April 2020) Yellow Band	2
	237011	Filter Element Filtrec	Ref.
	210422	Filter Hydraulic Parker 18P210 (Pre April 2020) All Black	Ref.
	210423	Filter Element Parker	Ref.
7	210942	Fitting Hyd.- Nipple 3/4BSPPM x 1-1/16JICM	10
8	225682	Nipple 3/4” BSPPM x 7/8” JICM	2
9	217501	Nipple 1/2” BSPPM x 7/8” JICM	2
10	210948	Fitting Hyd.- Elbow 1-1/16JICMM with hole	1
11	221658	Fitting Hyd.- Nipple 1/4 BSPTM x 9/16JICM	1
12	956007001	Fitting Hyd.- Tee 9/16JICMMF	1
13	211509	Fitting Hyd.- Elbow 1/2BSPPM x 1-1/16JICM	8
14	229237	Fitting Hyd.- Elbow 1/4BSPPM x 9/16JICM	2
15	217431	Fitting Hyd.- Elbow 1-1/16JICM-F 45°	8
16	233997	Bracket Double Spring Mount Hydraulic Hoses	1
17	210947	Elbow 1-1/16” JICM 90 Deg	1
18	234004	Hose Assembly 3/4” x 3200mm	2
19	234008	Hose Assembly 1/2” x 4100mm	2
20	234007	Hose Assembly 1/4” x 1200mm	2
21	234001	Hose Assembly 3/4” x 2000mm	2
22	234002	Hose Assembly 3/4” x 2500mm	2
23	234003	Hose Assembly 3/4” x 4500mm	2
24	234006	Hose Assembly 3/4” x 2100mm	2
25	234005	Hose Assembly 3/4” x 1100mm	2
26	208426	Fitting Hyd. - Tee 1-1/16” JICMFM	2
27	208568	Fitting Hyd. – Adaptor 3/4” BSPPM x 1-1/16” JICF	2
28	209694	Valve Check – Ball Type 3/4” BSPP	1
29	211089	Spring Front Drawbar SPR For Hoses	2
30	231116	Support Tray-VRT Hydraulic Hoses	1
31	205510	Clamp Pipe Double 28mm	7
32	208614	Clamp Pipe Double 21.3mm	5
33	913217	Bolt M6 x 90 GR8.8 Hex Z/P	5
34	907201	Washer Flat M6 x 25 Z/P	7
35	206309	Washer Flat M6 x 12.5 Z/P	5
36	903202	Nut Nyloc M6 CL8 AS1285	5
37	903302	Nut Nyloc M8 CL8 AS1285	4
38	906301	Washer Flat 5/16 x 7/8 x 16 Z/P	4

ITEM	PART NUMBER	DESCRIPTION	QTY.
39	917308	Screw Set M8 x 20 x 1.25P	2
40	210118	Clamp Exhaust Suit 50mm Z/P	1
41	234404	Mount Bracket – Exhaust Clamp	1
42	913214	Bolt M6 x 50 GR8.8 Hex Z/P	2
43	908201	Washer Spring 1/4” x 1/16”	2
44	234009	ID Tag – Feed Chain	2
45	234010	ID Tag – Spinner	2
46	-	Nipple – Check Valve 1-1/16 JICM	Ref.
47	232354	Hyd. Hose Kit (includes all hoses used)	Ref.

OPTIONAL EQUIPMENT PARTS

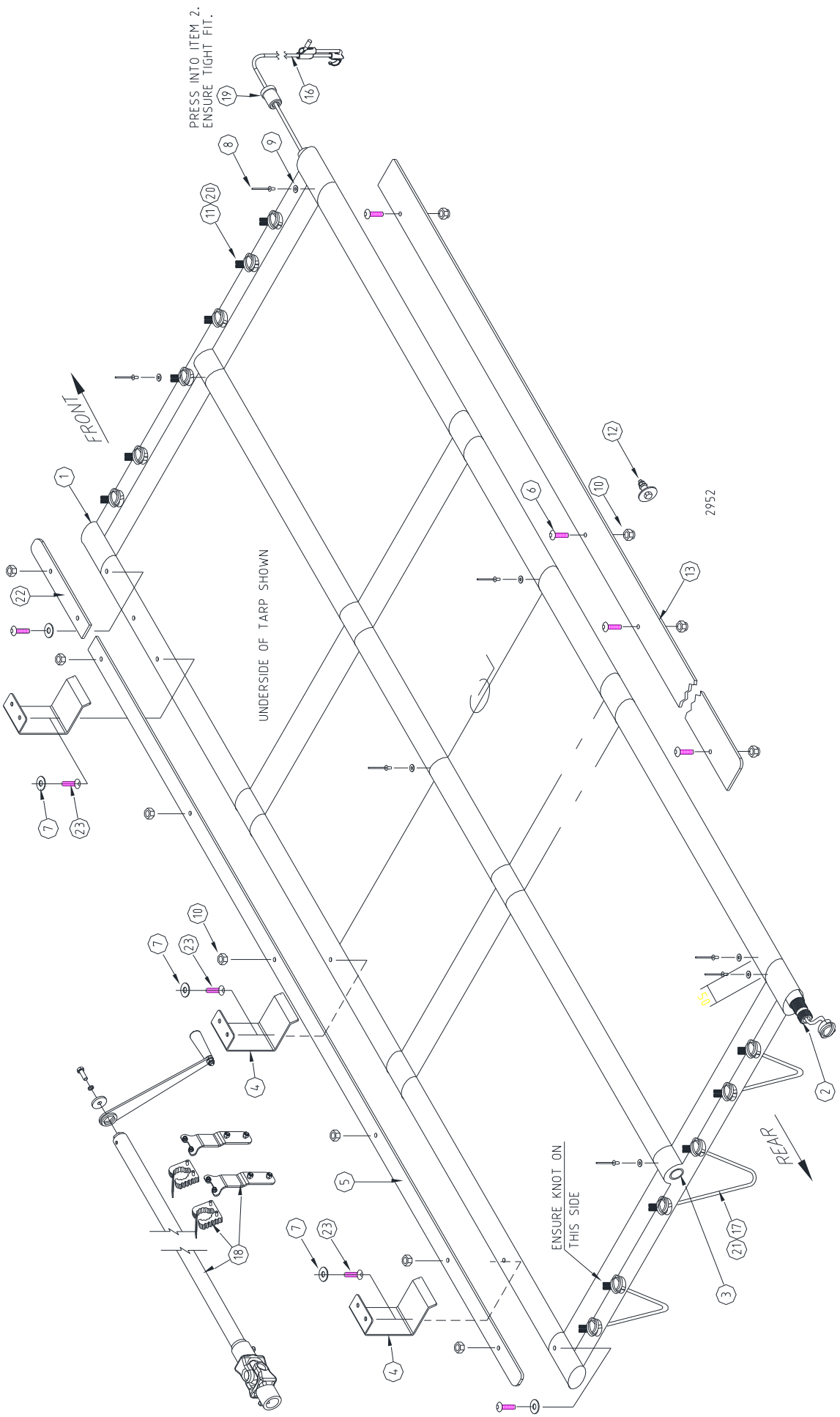
PRESS INTO ITEM 2.
ENSURE TIGHT FIT.
FRONT
UNDERSIDE OF TARP SHOWN
2952
ENSURE KNOT ON
THIS SIDE
REAR

Tarp Kit Option

ITEM	PART NUMBER	DESCRIPTION	QTY.	
			9T	12T
1	231385	Tarp PVC Roll 9 & 12T	1	1
2	234399	Tube Assy - Tarp Winding 9 & 12T	1	1
3	231387	Tube Centre Assy 9 &12T	1	1
4	231393	Bracket – Tarp Rest H/Duty	3	3
5	231389	Plate Tarp Clamping - Long	1	1
6	917327	Screw Set M8 x 30 Pan Head Z/P	10	10
7	906301	Washer Flat 5/16” x 7/8” x 16 Z/P	12	12
8	210776	Rivet S/S 4.8mm Dia x 7.9mm	7	7
9	229368	Washer Formed	7	7
10	903302	Nut Nyloc M8	16	16
11	211788-1	Cord Elastic Spreader	4	4
12	229043	Ferrule Tensioner - Spreader	1	1
13	231388	Plate Tarp Stopper	1	1
14	229389	Instruction – Tarp Kit (Not Shown)	1	1
15				
16	229372	Tarp Tensioner – Shock Cord	1	1
17	211788-2	Cord Shock Spreader	1	1
18	234401	Crank Arm Assy Roll over Tarp	1	1
19	229377	End Cap	1	1
20	230250	Cord - Long	4	4
21	230251	Cord - Long	1	1
22	231390	Plate Tarp Clamping - Short	1	1
23	922331	Screw Cap M8x25 C/Sunk Z/P	6	6
24	231384	Tarp Kit Assy– 9 & 12T Spreader (Not Shown)	Ref.	Ref.
	Hook & Rivets for Securing Elastic Cord on Front & Rear Panels of Spreader			
25	211157	Hook-Lashing (Not Shown)	5	5
26	206291	Rivet-4.8mm (Not Shown)	10	10

Tarp Kit Option

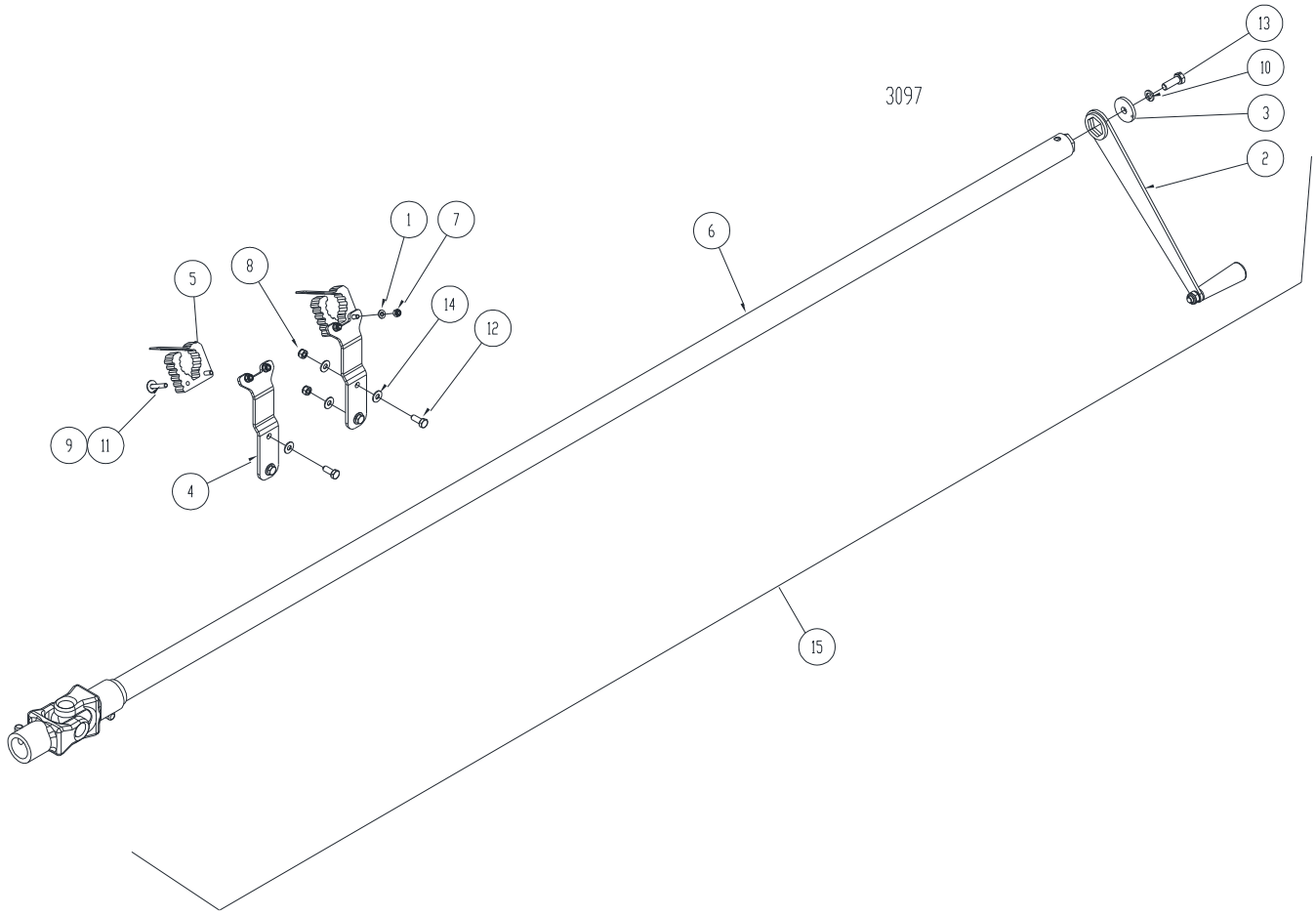

ITEM	PART NUMBER	DESCRIPTION	QTY.
1	206309	Washer Flat M6 x 12.7 Z/P	4
2	211813	Kit Handle Assy	1
3	229040	Washer - Spreader	1
4	231391	Plate-Crank Arm Holder Mount	2
5	231392	Clamp-Rubber Tie Down	2
6	234400	Crank Arm-Spline Type	1
7	903202	Nut Nyloc M6	4
8	903305	Nut Nyloc M8 S/S 304	4
9	906201	Washer Flat 1/4 x 3/4 16G Z/P	4
10	909005	Washer Spring M10 x 2.35 x 2.40 Z/P	1
11	913211	Bolt M6x35 GR8.8 HEX Z/P	4
12	917331	Screw Set M8x25 x1.25P S/S 304	4
13	917404	Screw Set M10x30 GR8.8 Z/P	1
14	907300	Washer Flat M8 S/S 304	8
15	234401	Crank Arm Assy Rollover Tarp	Ref.

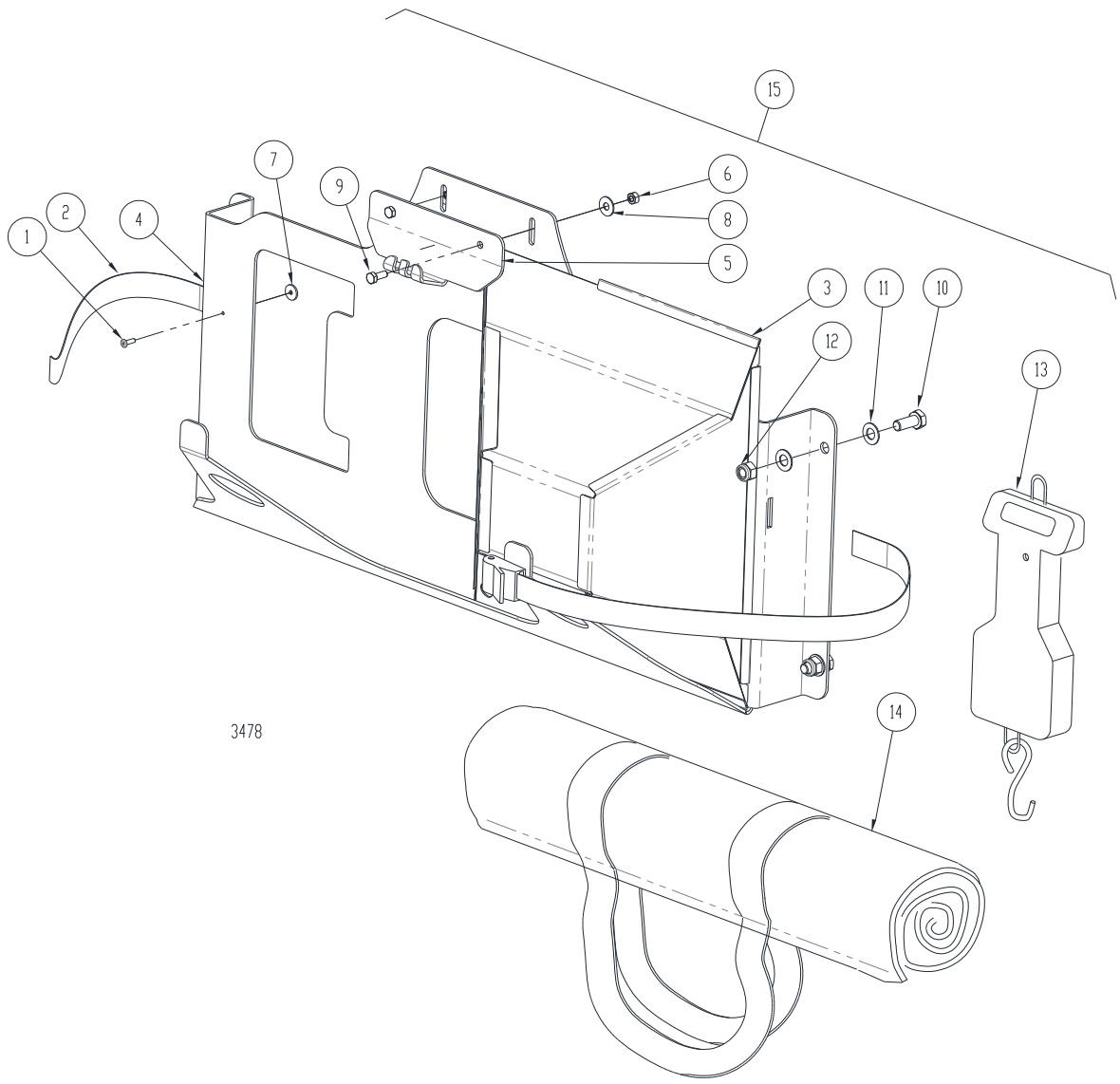

ITEM	PART NUMBER	DESCRIPTION	QTY.
1	205818	Rivet Alum. 5/32”	2
2	217027	Strap	1
3	236631	Tray - Sample	2
4	236632	Panel – Tray Holder	1
5	236633	Panel	1
6	903202	Nut Nyloc M6	2
7	906105	Washer Flat 5/32 x 9/16 x 18G	2
8	906201	Washer Flat 1/4 x 3/4 16G Z/P	2
9	917207	Screw Set M6 x 16	2
10	917421	Screw Set M10 x 25 S/S	4
11	907417	Washer Flat M10 x 21 x 1.2 S/S	8
12	903409	Nut Nyloc M10 S/S	4
13	217026	Scale Hanging 10kg	1
14	217028	Bag – Scale Calibration Kit	1
15	236634	Calibration Kit – WideSpread Spreader	Ref.

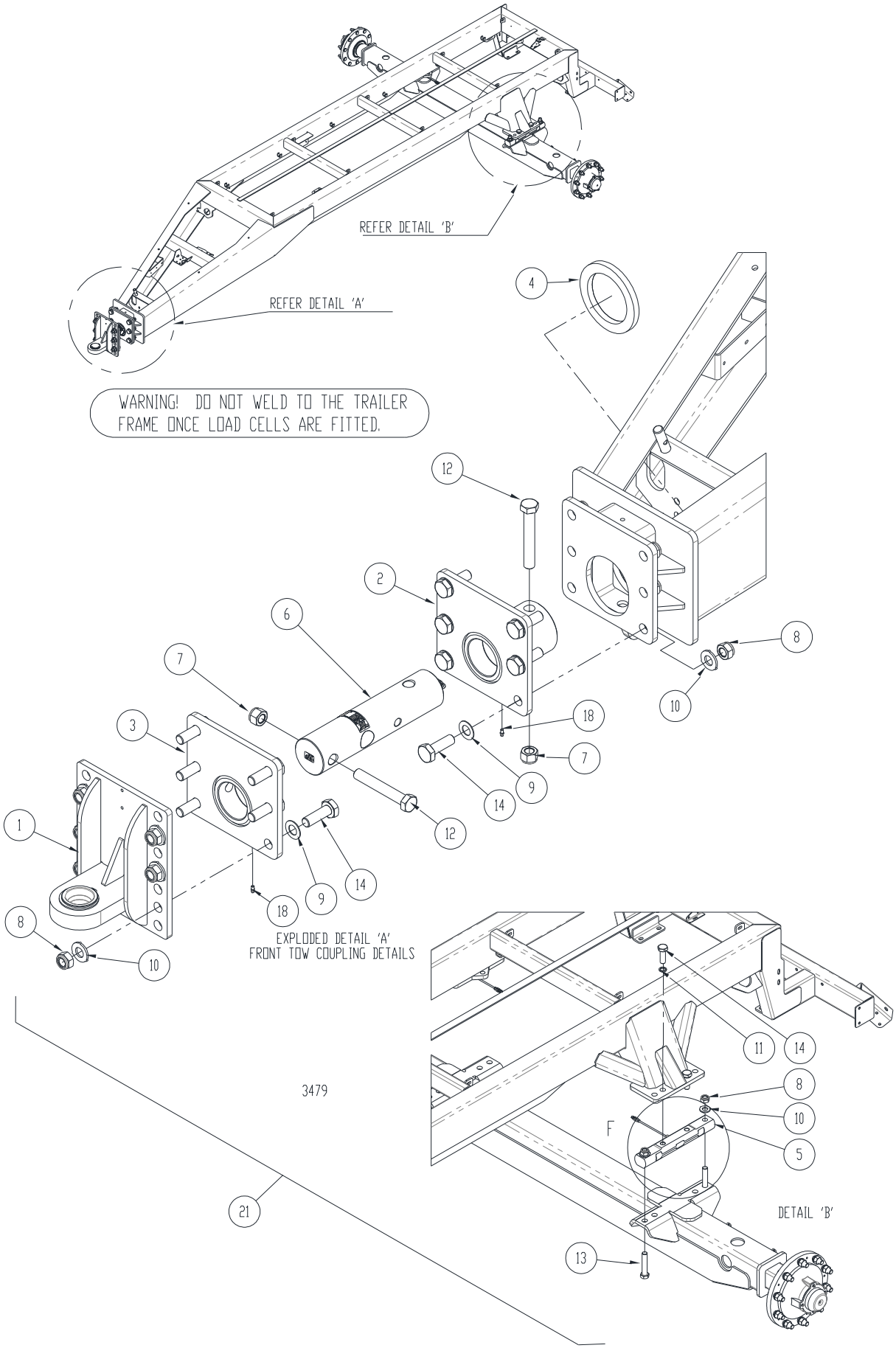
REFER DETAIL 'B'
REFER DETAIL 'A'
WARNING! DO NOT WELD TO THE TRAILER FRAME ONCE LOAD CELLS ARE FITTED.
EXPLODED DETAIL 'A'
FRONT TOW COUPLING DETAILS
3479
DETAIL 'B'
F

Load Cell Option

ITEM	PART NUMBER	DESCRIPTION	QTY.
1	227211	Hitch Tongue Assy	1
2	230934	Plate Assy – Weld in Front Hitch	1
3	230935	Plate Assy – Front Hitch Mnt	1
4	230938	Boss – Weld-on	1
5	231000	Load Cell – Double Ended	2
	238438	Load Cell – D/Ended-Yellow Band (March 2022-October 2022)	Ref.
	238520	Cover Panel for L/Cell 238438 (not shown)	Ref.
6	231001	Load Cell - Bar	1
7	903911	Nut Nyloc 1” UNC	2
8	904905	Nut Nyloc M24 CL8	10
9	906901	Washer Flat 1” x 1-7/8 x 16G	12
10	907405	Washer M24 Structural	10
11	908905	Washer Spring 1” x 3/16” x 3/16”	4
12	912920	Bolt 1” x 6.5” UNC	2
13	913809	Bolt M24 x 110 Gr8.8	4
14	917809	Screw Set M24 x 75	10
15	236393	Spacer - Load Cell Mount 0.55mm	3
16	236394	Spacer - Load Cell Mount 0.9mm	2
17	236754	Spacer - Load Cell Mount Brass 0.12mm	1
18	955001002	Nipple grease ¼”	2
19			
20			
21	233949	Load Cell Feature	Ref.

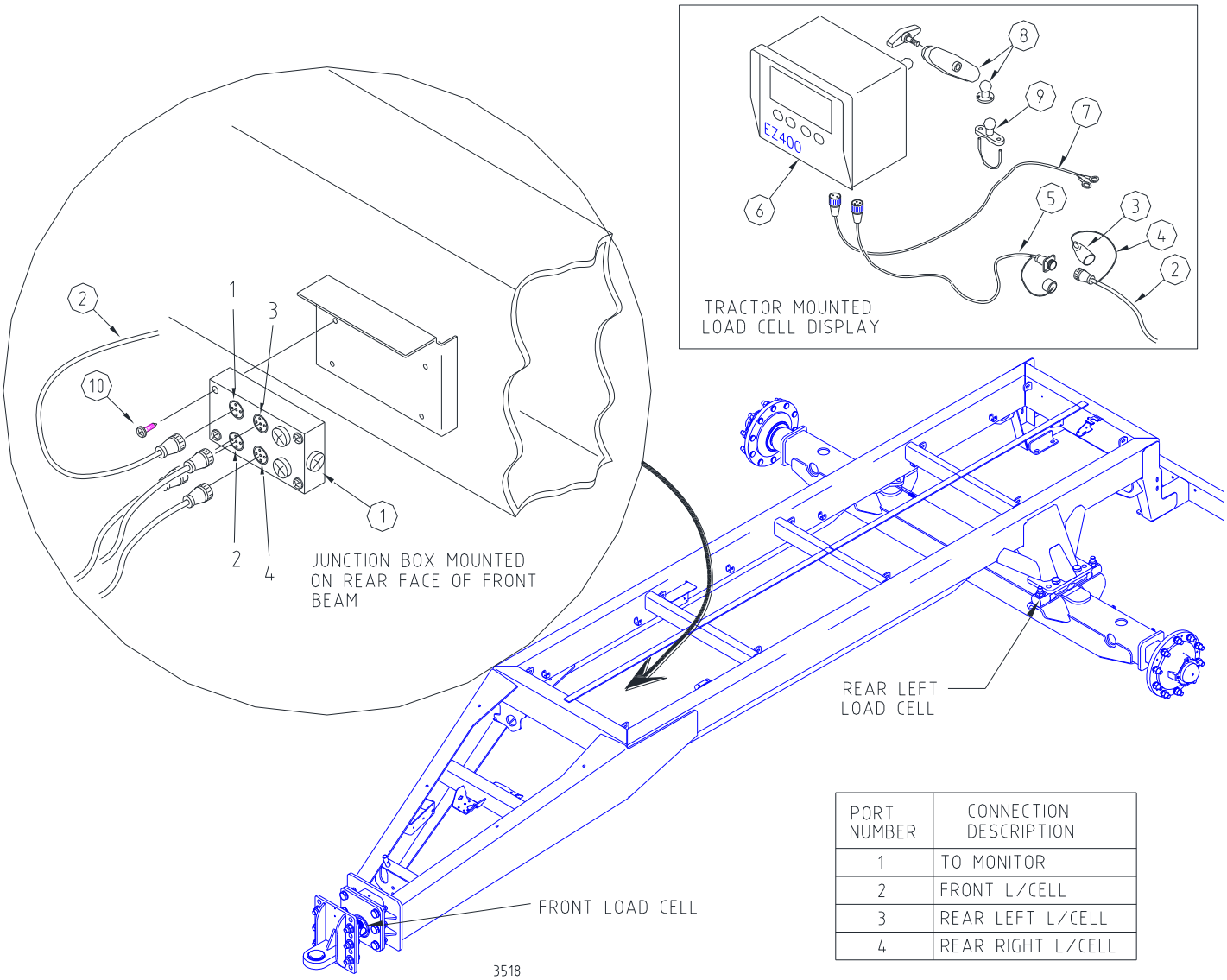

PORT NUMBER	CONNECTION DESCRIPTION
1	TO MONITOR
2	FRONT L/CELL
3	REAR LEFT L/CELL
4	REAR RIGHT L/CELL

ITEM	PART NUMBER	DESCRIPTION	QTY.
1	231002	Junction Block – Load Cell	1
2	231003	Cable -EZ Mate 3.6m	1
3	231004	Cover - Connector	1
4	231005	Strap	1
5	231006	Cable – J Box Extension - Tractor	1
6	231007	Monitor - Display	1
7	231008	Cable – Power 3m	1
8	231009	Mount Kit – Display RAM Mount	1
9	231010	Mount Base – Display RAM Mount	1
10	924126	Screw S/Tap Pan Hd 8G x 1-1/2”	2
11			
12	233950	Load Cell Monitor Option – Individual Display	Ref.
13			
14			

Rates Charts

How to read the Rates Charts

Gearbox ratio

Spread Width (m)

Bulk Density (kg/litre or Tonnes/cubic metre)

Application Rate (kg/ha)

Under Door dimension (mm) on Decal

Gear Box...Deep Low **RATE CHART KG. PER HA.**

Material Density 0.75 Figures in body of chart = mm of door opening

Width	8	10	12	14	16	18	20	22	24	26	28	30	32	34	36
Rate	.....	.....	.....	.....	.....	.....	.....	.....	.....	.....	.....	.....	.....	.....	.....
20	No	No	No	No	No	No	No	No	22	24	25	27	29	31	33
30	No	No	No	No	22	24	27	30	33	35	38	41	43	46	49
40	No	No	22	25	29	33	36	40	43	47	51	54	58	62	65
50	No	23	27	32	36	41	45	50	54	59	63	68	72	77	81
60	22	27	33	38	43	49	54	60	65	71	76	81	87	92	98
70	25	32	38	44	51	57	63	70	76	82	89	95	101	108	114
80	29	36	43	51	58	65	72	80	87	94	101	109	116	123	130
90	33	41	49	57	65	73	81	90	98	106	114	122	130	138	147
100	36	45	54	63	72	81	90	99	109	118	127	136	145	154	163
110	40	50	60	70	80	90	99	109	119	129	139	149	159	169	179
120	43	54	65	76	87	98	109	119	130	141	152	163	174	185	195
130	47	59	71	82	94	106	118	129	141	153	165	176	188	200	212
140	51	63	76	89	101	114	127	139	152	165	177	190	203	215	228
150	54	68	81	95	109	122	136	149	163	176	190	204	217	231	244
160	58	72	87	101	116	130	145	159	174	188	203	217	232	246	261
170	62	77	92	108	123	138	154	169	185	200	215	231	246	261	277
180	65	81	98	114	130	147	163	179	195	212	228	244	261	277	293
190	69	86	103	120	137	155	172	189	206	223	241	258	275	292	309
200	72	90	109	127	146	163	181	199	217	235	253	271	289	308	326
210	76	95	114	133	152	171	190	209	228	247	266	285	304	323	342
220	80	99	119	139	159	179	199	219	239	259	279	298	318	338	358
230	83	104	125	146	166	187	208	229	250	270	291	312	333	354	374
240	87	109	130	152	174	195	217	239	261	282	304	326	347	369	391
250	90	113	136	158	181	204	226	249	271	294	317	339	362	384	407

2202

Maximum door opening is 240mm

Note: Example may differ from actual charts in this manual. Use this example as a guide only and the following charts to determine the correct door settings.

Gear Box... Low			RATE CHART KG. PER HA.												
Material Density			Cu. M	0.75		Figures in body of chart = mm of door opening									
Width.	8	10	12	14	16	18	20	22	24	26	28	30	32	34	36
Rate	-	-------	-------	-------	-	-	-	-------	-------	-	-	-	-	-------	-------
20	No	No	No	No	No	26	29	32	35	38	41	44	47	49	52
30	No	No	26	31	35	39	44	48	52	57	61	65	70	74	78
40	No	29	35	41	47	52	58	64	70	76	81	87	93	99	105
50	29	36	44	51	58	65	73	80	87	94	102	109	116	124	131
60	35	44	52	61	70	78	87	96	105	113	122	131	140	148	157
70	41	51	61	71	81	92	102	112	122	132	142	153	163	173	183
80	47	58	70	81	93	105	116	128	140	151	163	174	186	198	209
90	52	65	78	92	105	118	131	144	157	170	183	196	209	222	235
100	58	73	87	102	116	131	145	160	174	189	203	218	233	247	262
110	64	80	96	112	128	144	160	176	192	208	224	240	256	272	288
120	70	87	105	122	140	157	174	192	209	227	244	262	279	297	314
130	76	94	113	132	151	170	189	208	227	246	265	283	302	321	340
140	81	102	122	142	163	183	203	224	244	265	285	305	326	346	366
150	87	109	131	153	174	196	218	240	262	283	305	327	349	371	392
160	93	116	140	163	186	209	233	256	279	302	326	349	372	395	419
170	99	124	148	173	198	222	247	272	297	321	346	371	395	420	445
180	105	131	157	183	209	235	262	288	314	340	366	392	419	445	471
190	110	138	166	193	221	249	276	304	331	359	387	414	442	469	497
200	116	145	174	203	233	262	291	320	349	378	407	436	465	494	523
210	122	153	183	214	244	275	305	336	366	397	427	458	488	519	549
220	128	160	192	224	256	288	320	352	384	416	448	480	512	544	576
230	134	167	201	234	267	301	334	368	401	435	468	501	535	568	602
240	140	174	209	244	279	314	349	384	419	453	488	523	558	593	628
250	145	182	218	254	291	327	363	400	436	472	509	545	581	618	654
260	151	189	227	265	302	340	378	416	453	491	529	567	605	642	680
270	157	196	235	275	314	353	392	432	471	510	549	589	628	667	706
280	163	203	244	285	326	366	407	448	488	529	570	610	651	692	733
290	169	211	253	295	337	379	421	464	506	548	590	632	674	717	759
300	174	218	262	305	349	392	436	480	523	567	610	654	698	741	785
320	186	233	279	326	372	419	465	512	558	605	651	698	744	791	837
340	198	247	297	346	395	445	494	544	593	642	692	741	791	840	890
360	209	262	314	366	419	471	523	576	628	680	733	785	837	890	942
380	221	276	331	387	442	497	552	608	663	718	773	828	884	939	994
400	233	291	349	407	465	523	581	640	698	756	814	872	930	988	*****
425	247	309	371	432	494	556	618	679	741	803	865	927	988	1050	*****
450	262	327	392	458	523	589	654	719	785	850	916	981	1046	1112	*****
475	276	345	414	483	552	621	690	759	828	897	967	1036	1105	1174	*****
500	291	363	436	509	581	654	727	799	872	945	*****	*****	*****	*****	*****
525	305	382	458	534	610	687	763	839	916	992	1068	1145	1221	1297	*****
550	320	400	480	560	640	719	799	879	959	1039	1119	1199	1279	1359	*****
575	334	418	501	585	669	752	836	919	*****	1086	1170	1254	1337	1421	*****
600	349	436	523	610	698	785	872	959	*****	1134	1221	1308	1395	1483	*****

Gear Box... Low			RATE CHART KG. PER HA.												
Material Density			Cu. M	0.80		Figures in body of chart = mm of door opening									
Width.	8	10	12	14	16	18	20	22	24	26	28	30	32	34	36
Rate	-	-------	-------	-------	-	-	-	-------	-------	-	-	-	-	-------	-------
20	No	No	No	No	No	No	27	30	33	35	38	41	44	46	49
30	No	No	No	29	33	37	41	45	49	53	57	61	65	69	74
40	No	27	33	38	44	49	55	60	65	71	76	82	87	93	98
50	27	34	41	48	55	61	68	75	82	89	95	102	109	116	123
60	33	41	49	57	65	74	82	90	98	106	114	123	131	139	147
70	38	48	57	67	76	86	95	105	114	124	134	143	153	162	172
80	44	55	65	76	87	98	109	120	131	142	153	164	174	185	196
90	49	61	74	86	98	110	123	135	147	159	172	184	196	208	221
100	55	68	82	95	109	123	136	150	164	177	191	204	218	232	245
110	60	75	90	105	120	135	150	165	180	195	210	225	240	255	270
120	65	82	98	114	131	147	164	180	196	213	229	245	262	278	294
130	71	89	106	124	142	159	177	195	213	230	248	266	283	301	319
140	76	95	114	134	153	172	191	210	229	248	267	286	305	324	343
150	82	102	123	143	164	184	204	225	245	266	286	307	327	347	368
160	87	109	131	153	174	196	218	240	262	283	305	327	349	371	392
170	93	116	139	162	185	208	232	255	278	301	324	347	371	394	417
180	98	123	147	172	196	221	245	270	294	319	343	368	392	417	441
190	104	129	155	181	207	233	259	285	311	337	362	388	414	440	466
200	109	136	164	191	218	245	273	300	327	354	382	409	436	463	491
210	114	143	172	200	229	258	286	315	343	372	401	429	458	486	515
220	120	150	180	210	240	270	300	330	360	390	420	450	480	510	540
230	125	157	188	219	251	282	313	345	376	407	439	470	501	533	564
240	131	164	196	229	262	294	327	360	392	425	458	491	523	556	589
250	136	170	204	238	273	307	341	375	409	443	477	511	545	579	613
260	142	177	213	248	283	319	354	390	425	461	496	531	567	602	638
270	147	184	221	258	294	331	368	405	441	478	515	552	589	625	662
280	153	191	229	267	305	343	382	420	458	496	534	572	610	649	687
290	158	198	237	277	316	356	395	435	474	514	553	593	632	672	711
300	164	204	245	286	327	368	409	450	491	531	572	613	654	695	736
320	174	218	262	305	349	392	436	480	523	567	610	654	698	741	785
340	185	232	278	324	371	417	463	510	556	602	649	695	741	788	834
360	196	245	294	343	392	441	491	540	589	638	687	736	785	834	883
380	207	259	311	362	414	466	518	570	621	673	725	777	828	880	932
400	218	273	327	382	436	491	545	600	654	709	763	818	872	927	981
425	232	290	347	405	463	521	579	637	695	753	811	869	927	984	*****
450	245	307	368	429	491	552	613	674	736	797	858	920	981	1042	*****
475	259	324	388	453	518	583	647	712	777	841	906	971	1036	1100	*****
500	273	341	409	477	545	613	681	749	818	886	954	*****	*****	*****	*****
525	286	358	429	501	572	644	715	787	858	930	1002	1073	1145	1216	*****
550	300	375	450	525	600	674	749	824	899	974	1049	1124	1199	1274	*****
575	313	392	470	548	627	705	783	862	940	1019	1097	1175	1254	1332	*****
600	327	409	491	572	654	736	818	899	981	1063	1145	1226	1308	1390	*****

Gear Box... Low				RATE CHART KG. PER HA.												
Material Density Cu. M			0.85			Figures in body of chart = mm of door opening										
Width.	8	10	12	14	16	18	20	22	24	26	28	30	32	34	36
Rate	-	--------	------	------	-	-	-	--------	------	-	-	-	-	--------	------
20	No	No	No	No	No	No	26	28	31	33	36	38	41	44	46
30	No	No	No	27	31	35	38	42	46	50	54	58	62	65	69
40	No	26	31	36	41	46	51	56	62	67	72	77	82	87	92
50	26	32	38	45	51	58	64	71	77	83	90	96	103	109	115
60	31	38	46	54	62	69	77	85	92	100	108	115	123	131	139
70	36	45	54	63	72	81	90	99	108	117	126	135	144	153	162
80	41	51	62	72	82	92	103	113	123	133	144	154	164	174	185
90	46	58	69	81	92	104	115	127	139	150	162	173	185	196	208
100	51	64	77	90	103	115	128	141	154	167	180	192	205	218	231
110	56	71	85	99	113	127	141	155	169	183	197	212	226	240	254
120	62	77	92	108	123	139	154	169	185	200	215	231	246	262	277
130	67	83	100	117	133	150	167	183	200	217	233	250	267	283	300
140	72	90	108	126	144	162	180	197	215	233	251	269	287	305	323
150	77	96	115	135	154	173	192	212	231	250	269	289	308	327	346
160	82	103	123	144	164	185	205	226	246	267	287	308	328	349	369
170	87	109	131	153	174	196	218	240	262	283	305	327	349	371	392
180	92	115	139	162	185	208	231	254	277	300	323	346	369	392	416
190	97	122	146	171	195	219	244	268	292	317	341	365	390	414	439
200	103	128	154	180	205	231	256	282	308	333	359	385	410	436	462
210	108	135	162	189	215	242	269	296	323	350	377	404	431	458	485
220	113	141	169	197	226	254	282	310	339	367	395	423	451	480	508
230	118	147	177	206	236	265	295	324	354	383	413	442	472	501	531
240	123	154	185	215	246	277	308	339	369	400	431	462	492	523	554
250	128	160	192	224	256	289	321	353	385	417	449	481	513	545	577
260	133	167	200	233	267	300	333	367	400	433	467	500	533	567	600
270	139	173	208	242	277	312	346	381	416	450	485	519	554	589	623
280	144	180	215	251	287	323	359	395	431	467	503	539	575	610	646
290	149	186	223	260	298	335	372	409	446	483	521	558	595	632	669
300	154	192	231	269	308	346	385	423	462	500	539	577	616	654	693
320	164	205	246	287	328	369	410	451	492	533	575	616	657	698	739
340	174	218	262	305	349	392	436	480	523	567	610	654	698	741	785
360	185	231	277	323	369	416	462	508	554	600	646	693	739	785	831
380	195	244	292	341	390	439	487	536	585	634	682	731	780	828	877
400	205	256	308	359	410	462	513	564	616	667	718	769	821	872	923
425	218	273	327	382	436	491	545	600	654	709	763	818	872	927	981
450	231	289	346	404	462	519	577	635	693	750	808	866	923	981	*****
475	244	305	365	426	487	548	609	670	731	792	853	914	975	1036	*****
500	256	321	385	449	513	577	641	705	769	834	898	962	*****	*****	*****
525	269	337	404	471	539	606	673	741	808	875	943	1010	1077	1145	*****
550	282	353	423	494	564	635	705	776	846	917	987	1058	1129	1199	*****
575	295	369	442	516	590	664	737	811	885	959	1032	1106	1180	1254	*****
600	308	385	462	539	616	693	769	846	923	1000	1077	1154	1231	1308	*****

Gear Box... Low				RATE CHART KG. PER HA.												
Material Density Cu. M			0.90			Figures in body of chart = mm of door opening										
Width.	8	10	12	14	16	18	20	22	24	26	28	30	32	34	36
Rate	-	--------	------	------	-	-	-	--------	------	-	-	-	-	--------	------
20	No	No	No	No	No	No	No	27	29	31	34	36	39	41	44
30	No	No	No	25	29	33	36	40	44	47	51	55	58	62	65
40	No	No	29	34	39	44	48	53	58	63	68	73	78	82	87
50	No	30	36	42	48	55	61	67	73	79	85	91	97	103	109
60	29	36	44	51	58	65	73	80	87	94	102	109	116	124	131
70	34	42	51	59	68	76	85	93	102	110	119	127	136	144	153
80	39	48	58	68	78	87	97	107	116	126	136	145	155	165	174
90	44	55	65	76	87	98	109	120	131	142	153	164	174	185	196
100	48	61	73	85	97	109	121	133	145	157	170	182	194	206	218
110	53	67	80	93	107	120	133	147	160	173	187	200	213	226	240
120	58	73	87	102	116	131	145	160	174	189	203	218	233	247	262
130	63	79	94	110	126	142	157	173	189	205	220	236	252	268	283
140	68	85	102	119	136	153	170	187	203	220	237	254	271	288	305
150	73	91	109	127	145	164	182	200	218	236	254	273	291	309	327
160	78	97	116	136	155	174	194	213	233	252	271	291	310	329	349
170	82	103	124	144	165	185	206	226	247	268	288	309	329	350	371
180	87	109	131	153	174	196	218	240	262	283	305	327	349	371	392
190	92	115	138	161	184	207	230	253	276	299	322	345	368	391	414
200	97	121	145	170	194	218	242	266	291	315	339	363	388	412	436
210	102	127	153	178	203	229	254	280	305	331	356	382	407	432	458
220	107	133	160	187	213	240	266	293	320	346	373	400	426	453	480
230	111	139	167	195	223	251	279	306	334	362	390	418	446	474	501
240	116	145	174	203	233	262	291	320	349	378	407	436	465	494	523
250	121	151	182	212	242	273	303	333	363	394	424	454	484	515	545
260	126	157	189	220	252	283	315	346	378	409	441	472	504	535	567
270	131	164	196	229	262	294	327	360	392	425	458	491	523	556	589
280	136	170	203	237	271	305	339	373	407	441	475	509	543	577	610
290	140	176	211	246	281	316	351	386	421	457	492	527	562	597	632
300	145	182	218	254	291	327	363	400	436	472	509	545	581	618	654
320	155	194	233	271	310	349	388	426	465	504	543	581	620	659	698
340	165	206	247	288	329	371	412	453	494	535	577	618	659	700	741
360	174	218	262	305	349	392	436	480	523	567	610	654	698	741	785
380	184	230	276	322	368	414	460	506	552	598	644	690	736	782	828
400	194	242	291	339	388	436	484	533	581	630	678	727	775	824	872
425	206	257	309	360	412	463	515	566	618	669	721	772	824	875	927
450	218	273	327	382	436	491	545	600	654	709	763	818	872	927	981
475	230	288	345	403	460	518	575	633	690	748	805	863	921	978	*****
500	242	303	363	424	484	545	606	666	727	787	848	908	969	*****	*****
525	254	318	382	445	509	572	636	699	763	827	890	954	1017	1081	*****
550	266	333	400	466	533	600	666	733	799	866	933	999	1066	1132	*****
575	279	348	418	488	557	627	696	766	836	905	975	1045	1114	1184	*****
600	291	363	436	509	581	654	727	799	872	945	1017	1090	1163	1235	*****

Gear Box... Low — **RATE CHART KG. PER HA.**

Material Density Cu. M 0.95 — Figures in body of chart = mm of door opening

Width.	8	10	12	14	16	18	20	22	24	26	28	30	32	34	36
Rate	-	---	---	---	-	-	-	---	---	-	-	-	-	---	---
20	No	No	No	No	No	No	No	25	28	30	32	34	37	39	41
30	No	No	No	No	28	31	34	38	41	45	48	52	55	59	62
40	No	No	28	32	37	41	46	50	55	60	64	69	73	78	83
50	No	29	34	40	46	52	57	63	69	75	80	86	92	98	103
60	28	34	41	48	55	62	69	76	83	90	96	103	110	117	124
70	32	40	48	56	64	72	80	88	96	104	112	120	129	137	145
80	37	46	55	64	73	83	92	101	110	119	129	138	147	156	165
90	41	52	62	72	83	93	103	114	124	134	145	155	165	176	186
100	46	57	69	80	92	103	115	126	138	149	161	172	184	195	207
110	50	63	76	88	101	114	126	139	151	164	177	189	202	215	227
120	55	69	83	96	110	124	138	151	165	179	193	207	220	234	248
130	60	75	90	104	119	134	149	164	179	194	209	224	239	254	269
140	64	80	96	112	129	145	161	177	193	209	225	241	257	273	289
150	69	86	103	120	138	155	172	189	207	224	241	258	275	293	310
160	73	92	110	129	147	165	184	202	220	239	257	275	294	312	330
170	78	98	117	137	156	176	195	215	234	254	273	293	312	332	351
180	83	103	124	145	165	186	207	227	248	269	289	310	330	351	372
190	87	109	131	153	174	196	218	240	262	283	305	327	349	371	392
200	92	115	138	161	184	207	229	252	275	298	321	344	367	390	413
210	96	120	145	169	193	217	241	265	289	313	337	361	386	410	434
220	101	126	151	177	202	227	252	278	303	328	353	379	404	429	454
230	106	132	158	185	211	238	264	290	317	343	369	396	422	449	475
240	110	138	165	193	220	248	275	303	330	358	386	413	441	468	496
250	115	143	172	201	229	258	287	316	344	373	402	430	459	488	516
260	119	149	179	209	239	269	298	328	358	388	418	448	477	507	537
270	124	155	186	217	248	279	310	341	372	403	434	465	496	527	558
280	129	161	193	225	257	289	321	353	386	418	450	482	514	546	578
290	133	166	200	233	266	299	333	366	399	433	466	499	532	566	599
300	138	172	207	241	275	310	344	379	413	448	482	516	551	585	620
320	147	184	220	257	294	330	367	404	441	477	514	551	587	624	661
340	156	195	234	273	312	351	390	429	468	507	546	585	624	663	702
360	165	207	248	289	330	372	413	454	496	537	578	620	661	702	744
380	174	218	262	305	349	392	436	480	523	567	610	654	698	741	785
400	184	229	275	321	367	413	459	505	551	597	643	688	734	780	826
425	195	244	293	341	390	439	488	536	585	634	683	731	780	829	878
450	207	258	310	361	413	465	516	568	620	671	723	775	826	878	929
475	218	273	327	382	436	491	545	600	654	709	763	818	872	927	981
500	229	287	344	402	459	516	574	631	688	746	803	861	918	975	*****
525	241	301	361	422	482	542	602	663	723	783	843	904	964	1024	*****
550	252	316	379	442	505	568	631	694	757	820	884	947	1010	1073	*****
575	264	330	396	462	528	594	660	726	792	858	924	990	1056	1122	*****
600	275	344	413	482	551	620	688	757	826	895	964	1033	1102	1170	*****

Gear Box... Low — **RATE CHART KG. PER HA.**

Material Density Cu. M 1.00 — Figures in body of chart = mm of door opening

Width.	8	10	12	14	16	18	20	22	24	26	28	30	32	34	36
Rate	-	---	---	---	-	-	-	---	---	-	-	-	-	---	---
20	No	No	No	No	No	No	No	No	26	28	31	33	35	37	39
30	No	No	No	No	26	29	33	36	39	43	46	49	52	56	59
40	No	No	26	31	35	39	44	48	52	57	61	65	70	74	78
50	No	27	33	38	44	49	55	60	65	71	76	82	87	93	98
60	26	33	39	46	52	59	65	72	78	85	92	98	105	111	118
70	31	38	46	53	61	69	76	84	92	99	107	114	122	130	137
80	35	44	52	61	70	78	87	96	105	113	122	131	140	148	157
90	39	49	59	69	78	88	98	108	118	128	137	147	157	167	177
100	44	55	65	76	87	98	109	120	131	142	153	164	174	185	196
110	48	60	72	84	96	108	120	132	144	156	168	180	192	204	216
120	52	65	78	92	105	118	131	144	157	170	183	196	209	222	235
130	57	71	85	99	113	128	142	156	170	184	198	213	227	241	255
140	61	76	92	107	122	137	153	168	183	198	214	229	244	259	275
150	65	82	98	114	131	147	164	180	196	213	229	245	262	278	294
160	70	87	105	122	140	157	174	192	209	227	244	262	279	297	314
170	74	93	111	130	148	167	185	204	222	241	259	278	297	315	334
180	78	98	118	137	157	177	196	216	235	255	275	294	314	334	353
190	83	104	124	145	166	186	207	228	249	269	290	311	331	352	373
200	87	109	131	153	174	196	218	240	262	283	305	327	349	371	392
210	92	114	137	160	183	206	229	252	275	298	320	343	366	389	412
220	96	120	144	168	192	216	240	264	288	312	336	360	384	408	432
230	100	125	150	176	201	226	251	276	301	326	351	376	401	426	451
240	105	131	157	183	209	235	262	288	314	340	366	392	419	445	471
250	109	136	164	191	218	245	273	300	327	354	382	409	436	463	491
260	113	142	170	198	227	255	283	312	340	368	397	425	453	482	510
270	118	147	177	206	235	265	294	324	353	383	412	441	471	500	530
280	122	153	183	214	244	275	305	336	366	397	427	458	488	519	549
290	126	158	190	221	253	285	316	348	379	411	443	474	506	537	569
300	131	164	196	229	262	294	327	360	392	425	458	491	523	556	589
320	140	174	209	244	279	314	349	384	419	453	488	523	558	593	628
340	148	185	222	259	297	334	371	408	445	482	519	556	593	630	667
360	157	196	235	275	314	353	392	432	471	510	549	589	628	667	706
380	166	207	249	290	331	373	414	456	497	538	580	621	663	704	746
400	174	218	262	305	349	392	436	480	523	567	610	654	698	741	785
425	185	232	278	324	371	417	463	510	556	602	649	695	741	788	834
450	196	245	294	343	392	441	491	540	589	638	687	736	785	834	883
475	207	259	311	362	414	466	518	570	621	673	725	777	828	880	932
500	218	273	327	382	436	491	545	600	654	709	763	818	872	927	981
525	229	286	343	401	458	515	572	630	687	744	801	858	916	973	*****
550	240	300	360	420	480	540	600	659	719	779	839	899	959	1019	*****
575	251	313	376	439	501	564	627	689	752	815	878	940	1003	1066	*****
600	262	327	392	458	523	589	654	719	785	850	916	981	1046	1112	*****

Gear Box... Low — **RATE CHART KG. PER HA.**

Material Density Cu. M 1.05 — Figures in body of chart = mm of door opening

Width.	8	10	12	14	16	18	20	22	24	26	28	30	32	34	36
Rate	-	-------	------	------	-	-	-	-------	------	-	-	-	-	-------	------
20	No	No	No	No	No	No	No	No	No	27	29	31	33	35	37
30	No	No	No	No	No	28	31	34	37	40	44	47	50	53	56
40	No	No	No	29	33	37	42	46	50	54	58	62	66	71	75
50	No	26	31	36	42	47	52	57	62	67	73	78	83	88	93
60	No	31	37	44	50	56	62	69	75	81	87	93	100	106	112
70	29	36	44	51	58	65	73	80	87	94	102	109	116	124	131
80	33	42	50	58	66	75	83	91	100	108	116	125	133	141	149
90	37	47	56	65	75	84	93	103	112	121	131	140	149	159	168
100	42	52	62	73	83	93	104	114	125	135	145	156	166	176	187
110	46	57	69	80	91	103	114	126	137	148	160	171	183	194	206
120	50	62	75	87	100	112	125	137	149	162	174	187	199	212	224
130	54	67	81	94	108	121	135	148	162	175	189	202	216	229	243
140	58	73	87	102	116	131	145	160	174	189	203	218	233	247	262
150	62	78	93	109	125	140	156	171	187	202	218	234	249	265	280
160	66	83	100	116	133	149	166	183	199	216	233	249	266	282	299
170	71	88	106	124	141	159	176	194	212	229	247	265	282	300	318
180	75	93	112	131	149	168	187	206	224	243	262	280	299	318	336
190	79	99	118	138	158	178	197	217	237	256	276	296	316	335	355
200	83	104	125	145	166	187	208	228	249	270	291	311	332	353	374
210	87	109	131	153	174	196	218	240	262	283	305	327	349	371	392
220	91	114	137	160	183	206	228	251	274	297	320	343	365	388	411
230	96	119	143	167	191	215	239	263	287	310	334	358	382	406	430
240	100	125	149	174	199	224	249	274	299	324	349	374	399	424	448
250	104	130	156	182	208	234	260	285	311	337	363	389	415	441	467
260	108	135	162	189	216	243	270	297	324	351	378	405	432	459	486
270	112	140	168	196	224	252	280	308	336	364	392	420	448	477	505
280	116	145	174	203	233	262	291	320	349	378	407	436	465	494	523
290	120	151	181	211	241	271	301	331	361	391	421	452	482	512	542
300	125	156	187	218	249	280	311	343	374	405	436	467	498	529	561
320	133	166	199	233	266	299	332	365	399	432	465	498	532	565	598
340	141	176	212	247	282	318	353	388	424	459	494	529	565	600	635
360	149	187	224	262	299	336	374	411	448	486	523	561	598	635	673
380	158	197	237	276	316	355	395	434	473	513	552	592	631	671	710
400	166	208	249	291	332	374	415	457	498	540	581	623	664	706	747
425	176	221	265	309	353	397	441	485	529	574	618	662	706	750	794
450	187	234	280	327	374	420	467	514	561	607	654	701	747	794	841
475	197	247	296	345	395	444	493	542	592	641	690	740	789	838	888
500	208	260	311	363	415	467	519	571	623	675	727	779	831	882	934
525	218	273	327	382	436	491	545	600	654	709	763	818	872	927	981
550	228	285	343	400	457	514	571	628	685	742	799	856	914	971	*****
575	239	298	358	418	478	537	597	657	716	776	836	895	955	1015	*****
600	249	311	374	436	498	561	623	685	747	810	872	934	997	1059	*****

Gear Box... Low — **RATE CHART KG. PER HA.**

Material Density Cu. M 1.10 — Figures in body of chart = mm of door opening

Width.	8	10	12	14	16	18	20	22	24	26	28	30	32	34	36
Rate	-	-------	------	------	-	-	-	-------	------	-	-	-	-	-------	------
20	No	No	No	No	No	No	No	No	No	26	28	30	32	34	36
30	No	No	No	No	No	27	30	33	36	39	42	45	48	51	54
40	No	No	No	28	32	36	40	44	48	52	55	59	63	67	71
50	No	No	30	35	40	45	50	55	59	64	69	74	79	84	89
60	No	30	36	42	48	54	59	65	71	77	83	89	95	101	107
70	28	35	42	49	55	62	69	76	83	90	97	104	111	118	125
80	32	40	48	55	63	71	79	87	95	103	111	119	127	135	143
90	36	45	54	62	71	80	89	98	107	116	125	134	143	152	161
100	40	50	59	69	79	89	99	109	119	129	139	149	159	168	178
110	44	55	65	76	87	98	109	120	131	142	153	164	174	185	196
120	48	59	71	83	95	107	119	131	143	155	166	178	190	202	214
130	52	64	77	90	103	116	129	142	155	167	180	193	206	219	232
140	55	69	83	97	111	125	139	153	166	180	194	208	222	236	250
150	59	74	89	104	119	134	149	164	178	193	208	223	238	253	268
160	63	79	95	111	127	143	159	174	190	206	222	238	254	270	285
170	67	84	101	118	135	152	168	185	202	219	236	253	270	286	303
180	71	89	107	125	143	161	178	196	214	232	250	268	285	303	321
190	75	94	113	132	151	169	188	207	226	245	264	282	301	320	339
200	79	99	119	139	159	178	198	218	238	258	277	297	317	337	357
210	83	104	125	146	166	187	208	229	250	271	291	312	333	354	375
220	87	109	131	153	174	196	218	240	262	283	305	327	349	371	392
230	91	114	137	160	182	205	228	251	274	296	319	342	365	387	410
240	95	119	143	166	190	214	238	262	285	309	333	357	381	404	428
250	99	124	149	173	198	223	248	273	297	322	347	372	396	421	446
260	103	129	155	180	206	232	258	283	309	335	361	386	412	438	464
270	107	134	161	187	214	241	268	294	321	348	375	401	428	455	482
280	111	139	166	194	222	250	277	305	333	361	388	416	444	472	499
290	115	144	172	201	230	259	287	316	345	374	402	431	460	489	517
300	119	149	178	208	238	268	297	327	357	386	416	446	476	505	535
320	127	159	190	222	254	285	317	349	381	412	444	476	507	539	571
340	135	168	202	236	270	303	337	371	404	438	472	505	539	573	606
360	143	178	214	250	285	321	357	392	428	464	499	535	571	606	642
380	151	188	226	264	301	339	377	414	452	490	527	565	603	640	678
400	159	198	238	277	317	357	396	436	476	515	555	595	634	674	714
425	168	211	253	295	337	379	421	463	505	548	590	632	674	716	758
450	178	223	268	312	357	401	446	491	535	580	624	669	714	758	803
475	188	235	282	329	377	424	471	518	565	612	659	706	753	800	847
500	198	248	297	347	396	446	495	545	595	644	694	743	793	842	892
525	208	260	312	364	416	468	520	572	624	676	728	780	832	884	936
550	218	273	327	382	436	491	545	600	654	709	763	818	872	927	981
575	228	285	342	399	456	513	570	627	684	741	798	855	912	969	*****
600	238	297	357	416	476	535	595	654	714	773	832	892	951	1011	*****

Gear Box... Low				RATE CHART KG. PER HA.											
Material Density Cu. M				1.15		Figures in body of chart = mm of door opening									
Width.	8	10	12	14	16	18	20	22	24	26	28	30	32	34	36
Rate	-	-------	------	------	-	-	-	-------	------	-	-	-	-	-------	------
20	No	No	No	No	No	No	No	No	No	No	27	28	30	32	34
30	No	No	No	No	No	26	28	31	34	37	40	43	45	48	51
40	No	No	No	27	30	34	38	42	45	49	53	57	61	64	68
50	No	No	28	33	38	43	47	52	57	62	66	71	76	81	85
60	No	28	34	40	45	51	57	63	68	74	80	85	91	97	102
70	27	33	40	46	53	60	66	73	80	86	93	100	106	113	119
80	30	38	45	53	61	68	76	83	91	99	106	114	121	129	136
90	34	43	51	60	68	77	85	94	102	111	119	128	136	145	154
100	38	47	57	66	76	85	95	104	114	123	133	142	152	161	171
110	42	52	63	73	83	94	104	115	125	136	146	156	167	177	188
120	45	57	68	80	91	102	114	125	136	148	159	171	182	193	205
130	49	62	74	86	99	111	123	136	148	160	173	185	197	209	222
140	53	66	80	93	106	119	133	146	159	173	186	199	212	226	239
150	57	71	85	100	114	128	142	156	171	185	199	213	227	242	256
160	61	76	91	106	121	136	152	167	182	197	212	227	243	258	273
170	64	81	97	113	129	145	161	177	193	209	226	242	258	274	290
180	68	85	102	119	136	154	171	188	205	222	239	256	273	290	307
190	72	90	108	126	144	162	180	198	216	234	252	270	288	306	324
200	76	95	114	133	152	171	190	209	227	246	265	284	303	322	341
210	80	100	119	139	159	179	199	219	239	259	279	299	318	338	358
220	83	104	125	146	167	188	209	229	250	271	292	313	334	355	375
230	87	109	131	153	174	196	218	240	262	283	305	327	349	371	392
240	91	114	136	159	182	205	227	250	273	296	318	341	364	387	409
250	95	118	142	166	190	213	237	261	284	308	332	355	379	403	427
260	99	123	148	173	197	222	246	271	296	320	345	370	394	419	444
270	102	128	154	179	205	230	256	282	307	333	358	384	409	435	461
280	106	133	159	186	212	239	265	292	318	345	372	398	425	451	478
290	110	137	165	192	220	247	275	302	330	357	385	412	440	467	495
300	114	142	171	199	227	256	284	313	341	370	398	427	455	483	512
320	121	152	182	212	243	273	303	334	364	394	425	455	485	516	546
340	129	161	193	226	258	290	322	355	387	419	451	483	516	548	580
360	136	171	205	239	273	307	341	375	409	444	478	512	546	580	614
380	144	180	216	252	288	324	360	396	432	468	504	540	576	612	648
400	152	190	227	265	303	341	379	417	455	493	531	569	607	645	682
425	161	201	242	282	322	363	403	443	483	524	564	604	645	685	725
450	171	213	256	299	341	384	427	469	512	555	597	640	682	725	768
475	180	225	270	315	360	405	450	495	540	585	630	675	720	765	810
500	190	237	284	332	379	427	474	521	569	616	664	711	758	806	853
525	199	249	299	348	398	448	498	547	597	647	697	746	796	846	896
550	209	261	313	365	417	469	521	573	626	678	730	782	834	886	938
575	218	273	327	382	436	491	545	600	654	709	763	818	872	927	981
600	227	284	341	398	455	512	569	626	682	739	796	853	910	967	*****

Gear Box... Low				RATE CHART KG. PER HA.											
Material Density Cu. M				1.20		Figures in body of chart = mm of door opening									
Width.	8	10	12	14	16	18	20	22	24	26	28	30	32	34	36
Rate	-	-------	------	------	-	-	-	-------	------	-	-	-	-	-------	------
20	No	No	No	No	No	No	No	No	No	No	25	27	29	31	33
30	No	No	No	No	No	No	27	30	33	35	38	41	44	46	49
40	No	No	No	25	29	33	36	40	44	47	51	55	58	62	65
50	No	No	27	32	36	41	45	50	55	59	64	68	73	77	82
60	No	27	33	38	44	49	55	60	65	71	76	82	87	93	98
70	25	32	38	45	51	57	64	70	76	83	89	95	102	108	114
80	29	36	44	51	58	65	73	80	87	94	102	109	116	124	131
90	33	41	49	57	65	74	82	90	98	106	114	123	131	139	147
100	36	45	55	64	73	82	91	100	109	118	127	136	145	154	164
110	40	50	60	70	80	90	100	110	120	130	140	150	160	170	180
120	44	55	65	76	87	98	109	120	131	142	153	164	174	185	196
130	47	59	71	83	94	106	118	130	142	154	165	177	189	201	213
140	51	64	76	89	102	114	127	140	153	165	178	191	203	216	229
150	55	68	82	95	109	123	136	150	164	177	191	204	218	232	245
160	58	73	87	102	116	131	145	160	174	189	203	218	233	247	262
170	62	77	93	108	124	139	154	170	185	201	216	232	247	263	278
180	65	82	98	114	131	147	164	180	196	213	229	245	262	278	294
190	69	86	104	121	138	155	173	190	207	224	242	259	276	293	311
200	73	91	109	127	145	164	182	200	218	236	254	273	291	309	327
210	76	95	114	134	153	172	191	210	229	248	267	286	305	324	343
220	80	100	120	140	160	180	200	220	240	260	280	300	320	340	360
230	84	104	125	146	167	188	209	230	251	272	293	313	334	355	376
240	87	109	131	153	174	196	218	240	262	283	305	327	349	371	392
250	91	114	136	159	182	204	227	250	273	295	318	341	363	386	409
260	94	118	142	165	189	213	236	260	283	307	331	354	378	402	425
270	98	123	147	172	196	221	245	270	294	319	343	368	392	417	441
280	102	127	153	178	203	229	254	280	305	331	356	382	407	432	458
290	105	132	158	184	211	237	263	290	316	342	369	395	421	448	474
300	109	136	164	191	218	245	273	300	327	354	382	409	436	463	491
320	116	145	174	203	233	262	291	320	349	378	407	436	465	494	523
340	124	154	185	216	247	278	309	340	371	402	432	463	494	525	556
360	131	164	196	229	262	294	327	360	392	425	458	491	523	556	589
380	138	173	207	242	276	311	345	380	414	449	483	518	552	587	621
400	145	182	218	254	291	327	363	400	436	472	509	545	581	618	654
425	154	193	232	270	309	347	386	425	463	502	540	579	618	656	695
450	164	204	245	286	327	368	409	450	491	531	572	613	654	695	736
475	173	216	259	302	345	388	431	475	518	561	604	647	690	734	777
500	182	227	273	318	363	409	454	500	545	590	636	681	727	772	818
525	191	238	286	334	382	429	477	525	572	620	668	715	763	811	858
550	200	250	300	350	400	450	500	550	600	650	699	749	799	849	899
575	209	261	313	366	418	470	522	575	627	679	731	783	836	888	940
600	218	273	327	382	436	491	545	600	654	709	763	818	872	927	981

Gear Box... Low — **RATE CHART KG. PER HA.**

Material Density Cu. M 1.30 — Figures in body of chart = mm of door opening

Width.	8	10	12	14	16	18	20	22	24	26	28	30	32	34	36
Rate	-	-------	------	------	-	-	-	-------	------	-	-	-	-	-------	------
20	No	No	No	No	No	No	No	No	No	No	No	25	27	29	30
30	No	No	No	No	No	No	25	28	30	33	35	38	40	43	45
40	No	No	No	No	27	30	34	37	40	44	47	50	54	57	60
50	No	No	25	29	34	38	42	46	50	55	59	63	67	71	75
60	No	25	30	35	40	45	50	55	60	65	70	75	80	86	91
70	No	29	35	41	47	53	59	65	70	76	82	88	94	100	106
80	27	34	40	47	54	60	67	74	80	87	94	101	107	114	121
90	30	38	45	53	60	68	75	83	91	98	106	113	121	128	136
100	34	42	50	59	67	75	84	92	101	109	117	126	134	143	151
110	37	46	55	65	74	83	92	101	111	120	129	138	148	157	166
120	40	50	60	70	80	91	101	111	121	131	141	151	161	171	181
130	44	55	65	76	87	98	109	120	131	142	153	164	174	185	196
140	47	59	70	82	94	106	117	129	141	153	164	176	188	200	211
150	50	63	75	88	101	113	126	138	151	164	176	189	201	214	226
160	54	67	80	94	107	121	134	148	161	174	188	201	215	228	241
170	57	71	86	100	114	128	143	157	171	185	200	214	228	242	257
180	60	75	91	106	121	136	151	166	181	196	211	226	241	257	272
190	64	80	96	112	127	143	159	175	191	207	223	239	255	271	287
200	67	84	101	117	134	151	168	184	201	218	235	252	268	285	302
210	70	88	106	123	141	158	176	194	211	229	247	264	282	299	317
220	74	92	111	129	148	166	184	203	221	240	258	277	295	314	332
230	77	96	116	135	154	174	193	212	231	251	270	289	309	328	347
240	80	101	121	141	161	181	201	221	241	262	282	302	322	342	362
250	84	105	126	147	168	189	210	231	252	273	293	314	335	356	377
260	87	109	131	153	174	196	218	240	262	283	305	327	349	371	392
270	91	113	136	158	181	204	226	249	272	294	317	340	362	385	408
280	94	117	141	164	188	211	235	258	282	305	329	352	376	399	423
290	97	122	146	170	195	219	243	267	292	316	340	365	389	413	438
300	101	126	151	176	201	226	252	277	302	327	352	377	402	428	453
320	107	134	161	188	215	241	268	295	322	349	376	402	429	456	483
340	114	143	171	200	228	257	285	314	342	371	399	428	456	485	513
360	121	151	181	211	241	272	302	332	362	392	423	453	483	513	543
380	127	159	191	223	255	287	319	351	382	414	446	478	510	542	574
400	134	168	201	235	268	302	335	369	402	436	470	503	537	570	604
425	143	178	214	249	285	321	356	392	428	463	499	535	570	606	641
450	151	189	226	264	302	340	377	415	453	491	528	566	604	641	679
475	159	199	239	279	319	358	398	438	478	518	558	597	637	677	717
500	168	210	252	293	335	377	419	461	503	545	587	629	671	713	755
525	176	220	264	308	352	396	440	484	528	572	616	660	704	748	792
550	184	231	277	323	369	415	461	507	553	600	646	692	738	784	830
575	193	241	289	338	386	434	482	530	579	627	675	723	771	820	868
600	201	252	302	352	402	453	503	553	604	654	704	755	805	855	906

Gear Box... Low — **RATE CHART KG. PER HA.**

Material Density Cu. M 1.40 — Figures in body of chart = mm of door opening

Width.	8	10	12	14	16	18	20	22	24	26	28	30	32	34	36
Rate	-	-------	------	------	-	-	-	-------	------	-	-	-	-	-------	------
20	No	No	No	No	No	No	No	No	No	No	No	No	No	26	28
30	No	No	No	No	No	No	No	26	28	30	33	35	37	40	42
40	No	No	No	No	No	28	31	34	37	40	44	47	50	53	56
50	No	No	No	27	31	35	39	43	47	51	55	58	62	66	70
60	No	No	28	33	37	42	47	51	56	61	65	70	75	79	84
70	No	27	33	38	44	49	55	60	65	71	76	82	87	93	98
80	No	31	37	44	50	56	62	69	75	81	87	93	100	106	112
90	28	35	42	49	56	63	70	77	84	91	98	105	112	119	126
100	31	39	47	55	62	70	78	86	93	101	109	117	125	132	140
110	34	43	51	60	69	77	86	94	103	111	120	128	137	146	154
120	37	47	56	65	75	84	93	103	112	121	131	140	149	159	168
130	40	51	61	71	81	91	101	111	121	132	142	152	162	172	182
140	44	55	65	76	87	98	109	120	131	142	153	164	174	185	196
150	47	58	70	82	93	105	117	128	140	152	164	175	187	199	210
160	50	62	75	87	100	112	125	137	149	162	174	187	199	212	224
170	53	66	79	93	106	119	132	146	159	172	185	199	212	225	238
180	56	70	84	98	112	126	140	154	168	182	196	210	224	238	252
190	59	74	89	104	118	133	148	163	178	192	207	222	237	251	266
200	62	78	93	109	125	140	156	171	187	202	218	234	249	265	280
210	65	82	98	114	131	147	164	180	196	213	229	245	262	278	294
220	69	86	103	120	137	154	171	188	206	223	240	257	274	291	308
230	72	90	107	125	143	161	179	197	215	233	251	269	287	304	322
240	75	93	112	131	149	168	187	206	224	243	262	280	299	318	336
250	78	97	117	136	156	175	195	214	234	253	273	292	311	331	350
260	81	101	121	142	162	182	202	223	243	263	283	304	324	344	364
270	84	105	126	147	168	189	210	231	252	273	294	315	336	357	378
280	87	109	131	153	174	196	218	240	262	283	305	327	349	371	392
290	90	113	135	158	181	203	226	248	271	294	316	339	361	384	406
300	93	117	140	164	187	210	234	257	280	304	327	350	374	397	420
320	100	125	149	174	199	224	249	274	299	324	349	374	399	424	448
340	106	132	159	185	212	238	265	291	318	344	371	397	424	450	477
360	112	140	168	196	224	252	280	308	336	364	392	420	448	477	505
380	118	148	178	207	237	266	296	325	355	385	414	444	473	503	533
400	125	156	187	218	249	280	311	343	374	405	436	467	498	529	561
425	132	165	199	232	265	298	331	364	397	430	463	496	529	563	596
450	140	175	210	245	280	315	350	385	420	455	491	526	561	596	631
475	148	185	222	259	296	333	370	407	444	481	518	555	592	629	666
500	156	195	234	273	311	350	389	428	467	506	545	584	623	662	701
525	164	204	245	286	327	368	409	450	491	531	572	613	654	695	736
550	171	214	257	300	343	385	428	471	514	557	600	642	685	728	771
575	179	224	269	313	358	403	448	492	537	582	627	672	716	761	806
600	187	234	280	327	374	420	467	514	561	607	654	701	747	794	841

Gear Box... Low				RATE CHART KG. PER HA.											
Material Density			Cu. M	1.50		Figures in body of chart = mm of door opening									
Width.	8	10	12	14	16	18	20	22	24	26	28	30	32	34	36
Rate	-	------	------	------	-	-	-	------	------	-	-	-	-	------	------
20	No	No	No	No	No	No	No	No	No	No	No	No	No	No	26
30	No	No	No	No	No	No	No	No	26	28	31	33	35	37	39
40	No	No	No	No	No	26	29	32	35	38	41	44	47	49	52
50	No	No	No	25	29	33	36	40	44	47	51	55	58	62	65
60	No	No	26	31	35	39	44	48	52	57	61	65	70	74	78
70	No	25	31	36	41	46	51	56	61	66	71	76	81	86	92
80	No	29	35	41	47	52	58	64	70	76	81	87	93	99	105
90	26	33	39	46	52	59	65	72	78	85	92	98	105	111	118
100	29	36	44	51	58	65	73	80	87	94	102	109	116	124	131
110	32	40	48	56	64	72	80	88	96	104	112	120	128	136	144
120	35	44	52	61	70	78	87	96	105	113	122	131	140	148	157
130	38	47	57	66	76	85	94	104	113	123	132	142	151	161	170
140	41	51	61	71	81	92	102	112	122	132	142	153	163	173	183
150	44	55	65	76	87	98	109	120	131	142	153	164	174	185	196
160	47	58	70	81	93	105	116	128	140	151	163	174	186	198	209
170	49	62	74	86	99	111	124	136	148	161	173	185	198	210	222
180	52	65	78	92	105	118	131	144	157	170	183	196	209	222	235
190	55	69	83	97	110	124	138	152	166	179	193	207	221	235	249
200	58	73	87	102	116	131	145	160	174	189	203	218	233	247	262
210	61	76	92	107	122	137	153	168	183	198	214	229	244	259	275
220	64	80	96	112	128	144	160	176	192	208	224	240	256	272	288
230	67	84	100	117	134	150	167	184	201	217	234	251	267	284	301
240	70	87	105	122	140	157	174	192	209	227	244	262	279	297	314
250	73	91	109	127	145	164	182	200	218	236	254	273	291	309	327
260	76	94	113	132	151	170	189	208	227	246	265	283	302	321	340
270	78	98	118	137	157	177	196	216	235	255	275	294	314	334	353
280	81	102	122	142	163	183	203	224	244	265	285	305	326	346	366
290	84	105	126	148	169	190	211	232	253	274	295	316	337	358	379
300	87	109	131	153	174	196	218	240	262	283	305	327	349	371	392
320	93	116	140	163	186	209	233	256	279	302	326	349	372	395	419
340	99	124	148	173	198	222	247	272	297	321	346	371	395	420	445
360	105	131	157	183	209	235	262	288	314	340	366	392	419	445	471
380	110	138	166	193	221	249	276	304	331	359	387	414	442	469	497
400	116	145	174	203	233	262	291	320	349	378	407	436	465	494	523
425	124	154	185	216	247	278	309	340	371	402	432	463	494	525	556
450	131	164	196	229	262	294	327	360	392	425	458	491	523	556	589
475	138	173	207	242	276	311	345	380	414	449	483	518	552	587	621
500	145	182	218	254	291	327	363	400	436	472	509	545	581	618	654
525	153	191	229	267	305	343	382	420	458	496	534	572	610	649	687
550	160	200	240	280	320	360	400	440	480	520	560	600	640	679	719
575	167	209	251	293	334	376	418	460	501	543	585	627	669	710	752
600	174	218	262	305	349	392	436	480	523	567	610	654	698	741	785

Gear Box... Low				RATE CHART KG. PER HA.											
Material Density			Cu. M	1.60		Figures in body of chart = mm of door opening									
Width.	8	10	12	14	16	18	20	22	24	26	28	30	32	34	36
Rate	-	------	------	------	-	-	-	------	------	-	-	-	-	------	------
20	No	No	No	No	No	No	No	No	No	No	No	No	No	No	No
30	No	No	No	No	No	No	No	No	No	27	29	31	33	35	37
40	No	No	No	No	No	No	27	30	33	35	38	41	44	46	49
50	No	No	No	No	27	31	34	37	41	44	48	51	55	58	61
60	No	No	No	29	33	37	41	45	49	53	57	61	65	69	74
70	No	No	29	33	38	43	48	52	57	62	67	72	76	81	86
80	No	27	33	38	44	49	55	60	65	71	76	82	87	93	98
90	No	31	37	43	49	55	61	67	74	80	86	92	98	104	110
100	27	34	41	48	55	61	68	75	82	89	95	102	109	116	123
110	30	37	45	52	60	67	75	82	90	97	105	112	120	127	135
120	33	41	49	57	65	74	82	90	98	106	114	123	131	139	147
130	35	44	53	62	71	80	89	97	106	115	124	133	142	151	159
140	38	48	57	67	76	86	95	105	114	124	134	143	153	162	172
150	41	51	61	72	82	92	102	112	123	133	143	153	164	174	184
160	44	55	65	76	87	98	109	120	131	142	153	164	174	185	196
170	46	58	69	81	93	104	116	127	139	151	162	174	185	197	208
180	49	61	74	86	98	110	123	135	147	159	172	184	196	208	221
190	52	65	78	91	104	117	129	142	155	168	181	194	207	220	233
200	55	68	82	95	109	123	136	150	164	177	191	204	218	232	245
210	57	72	86	100	114	129	143	157	172	186	200	215	229	243	258
220	60	75	90	105	120	135	150	165	180	195	210	225	240	255	270
230	63	78	94	110	125	141	157	172	188	204	219	235	251	266	282
240	65	82	98	114	131	147	164	180	196	213	229	245	262	278	294
250	68	85	102	119	136	153	170	187	204	221	238	255	273	290	307
260	71	89	106	124	142	159	177	195	213	230	248	266	283	301	319
270	74	92	110	129	147	166	184	202	221	239	258	276	294	313	331
280	76	95	114	134	153	172	191	210	229	248	267	286	305	324	343
290	79	99	119	138	158	178	198	217	237	257	277	296	316	336	356
300	82	102	123	143	164	184	204	225	245	266	286	307	327	347	368
320	87	109	131	153	174	196	218	240	262	283	305	327	349	371	392
340	93	116	139	162	185	208	232	255	278	301	324	347	371	394	417
360	98	123	147	172	196	221	245	270	294	319	343	368	392	417	441
380	104	129	155	181	207	233	259	285	311	337	362	388	414	440	466
400	109	136	164	191	218	245	273	300	327	354	382	409	436	463	491
425	116	145	174	203	232	261	290	319	347	376	405	434	463	492	521
450	123	153	184	215	245	276	307	337	368	399	429	460	491	521	552
475	129	162	194	227	259	291	324	356	388	421	453	485	518	550	583
500	136	170	204	238	273	307	341	375	409	443	477	511	545	579	613
525	143	179	215	250	286	322	358	393	429	465	501	537	572	608	644
550	150	187	225	262	300	337	375	412	450	487	525	562	600	637	674
575	157	196	235	274	313	353	392	431	470	509	548	588	627	666	705
600	164	204	245	286	327	368	409	450	491	531	572	613	654	695	736

Gear Box...Med. Gear **RATE CHART KG. PER HA.**

Material Density Cu. M 0.75 Figures in body of chart = mm of door opening

Width.	8	10	12	14	16	18	20	22	24	26	28	30	32	34	36
Rate	-	-	-	-	-	-	-	-	-	-	-	-	-	-	-------
80	No	No	29	33	38	43	48	53	57	62	67	72	76	81	86
90	No	27	32	38	43	48	54	59	64	70	75	81	86	91	97
100	No	30	36	42	48	54	60	66	72	78	84	90	96	102	107
110	26	33	39	46	53	59	66	72	79	85	92	99	105	112	118
120	29	36	43	50	57	64	72	79	86	93	100	107	115	122	129
130	31	39	47	54	62	70	78	85	93	101	109	116	124	132	140
140	33	42	50	59	67	75	84	92	100	109	117	125	134	142	150
150	36	45	54	63	72	81	90	99	107	116	125	134	143	152	161
160	38	48	57	67	76	86	96	105	115	124	134	143	153	162	172
170	41	51	61	71	81	91	102	112	122	132	142	152	162	173	183
180	43	54	64	75	86	97	107	118	129	140	150	161	172	183	193
190	45	57	68	79	91	102	113	125	136	147	159	170	182	193	204
200	48	60	72	84	96	107	119	131	143	155	167	179	191	203	215
210	50	63	75	88	100	113	125	138	150	163	176	188	201	213	226
220	53	66	79	92	105	118	131	144	158	171	184	197	210	223	236
230	55	69	82	96	110	124	137	151	165	179	192	206	220	233	247
240	57	72	86	100	115	129	143	158	172	186	201	215	229	244	258
250	60	75	90	104	119	134	149	164	179	194	209	224	239	254	269
260	62	78	93	109	124	140	155	171	186	202	217	233	248	264	279
270	64	81	97	113	129	145	161	177	193	210	226	242	258	274	290
280	67	84	100	117	134	150	167	184	201	217	234	251	268	284	301
290	69	87	104	121	139	156	173	190	208	225	242	260	277	294	312
300	72	90	107	125	143	161	179	197	215	233	251	269	287	305	322
320	76	96	115	134	153	172	191	210	229	248	268	287	306	325	344
340	81	102	122	142	162	183	203	223	244	264	284	305	325	345	365
360	86	107	129	150	172	193	215	236	258	279	301	322	344	365	387
380	91	113	136	159	182	204	227	250	272	295	318	340	363	386	408
400	96	119	143	167	191	215	239	263	287	310	334	358	382	406	430
425	102	127	152	178	203	228	254	279	305	330	355	381	406	431	457
450	107	134	161	188	215	242	269	296	322	349	376	403	430	457	484
475	113	142	170	199	227	255	284	312	340	369	397	425	454	482	511
500	119	149	179	209	239	269	299	328	358	388	418	448	478	508	537
525	125	157	188	219	251	282	313	345	376	408	439	470	502	533	564
550	131	164	197	230	263	296	328	361	394	427	460	493	525	558	591
575	137	172	206	240	275	309	343	378	412	446	481	515	549	584	618
600	143	179	215	251	287	322	358	394	430	466	502	537	573	609	645
650	155	194	233	272	310	349	388	427	466	505	543	582	621	660	699
700	167	209	251	293	334	376	418	460	502	543	585	627	669	711	752
750	179	224	269	313	358	403	448	493	537	582	627	672	717	761	806
800	191	239	287	334	382	430	478	525	573	621	669	717	764	812	860
850	203	254	305	355	406	457	508	558	609	660	711	761	812	863	914
900	215	269	322	376	430	484	537	591	645	699	752	806	860	914	967

Gear Box...Med. Gear **RATE CHART KG. PER HA.**

Material Density Cu. M 0.80 Figures in body of chart = mm of door opening

Width.	8	10	12	14	16	18	20	22	24	26	28	30	32	34	36
Rate	-	-	-	-	-	-	-	-	-	-	-	-	-	-	-------
80	No	No	27	31	36	40	45	49	54	58	63	67	72	76	81
90	No	25	30	35	40	45	50	55	60	65	71	76	81	86	91
100	No	28	34	39	45	50	56	62	67	73	78	84	90	95	101
110	No	31	37	43	49	55	62	68	74	80	86	92	99	105	111
120	27	34	40	47	54	60	67	74	81	87	94	101	107	114	121
130	29	36	44	51	58	65	73	80	87	95	102	109	116	124	131
140	31	39	47	55	63	71	78	86	94	102	110	118	125	133	141
150	34	42	50	59	67	76	84	92	101	109	118	126	134	143	151
160	36	45	54	63	72	81	90	99	107	116	125	134	143	152	161
170	38	48	57	67	76	86	95	105	114	124	133	143	152	162	171
180	40	50	60	71	81	91	101	111	121	131	141	151	161	171	181
190	43	53	64	74	85	96	106	117	128	138	149	160	170	181	191
200	45	56	67	78	90	101	112	123	134	146	157	168	179	190	202
210	47	59	71	82	94	106	118	129	141	153	165	176	188	200	212
220	49	62	74	86	99	111	123	135	148	160	172	185	197	209	222
230	51	64	77	90	103	116	129	142	154	167	180	193	206	219	232
240	54	67	81	94	107	121	134	148	161	175	188	202	215	228	242
250	56	70	84	98	112	126	140	154	168	182	196	210	224	238	252
260	58	73	87	102	116	131	146	160	175	189	204	218	233	247	262
270	60	76	91	106	121	136	151	166	181	196	212	227	242	257	272
280	63	78	94	110	125	141	157	172	188	204	219	235	251	266	282
290	65	81	97	114	130	146	162	179	195	211	227	244	260	276	292
300	67	84	101	118	134	151	168	185	202	218	235	252	269	285	302
320	72	90	107	125	143	161	179	197	215	233	251	269	287	305	322
340	76	95	114	133	152	171	190	209	228	247	266	285	305	324	343
360	81	101	121	141	161	181	202	222	242	262	282	302	322	343	363
380	85	106	128	149	170	191	213	234	255	277	298	319	340	362	383
400	90	112	134	157	179	202	224	246	269	291	313	336	358	381	403
425	95	119	143	167	190	214	238	262	285	309	333	357	381	404	428
450	101	126	151	176	202	227	252	277	302	327	353	378	403	428	453
475	106	133	160	186	213	239	266	292	319	346	372	399	425	452	479
500	112	140	168	196	224	252	280	308	336	364	392	420	448	476	504
525	118	147	176	206	235	264	294	323	353	382	411	441	470	500	529
550	123	154	185	216	246	277	308	339	369	400	431	462	493	523	554
575	129	161	193	225	257	290	322	354	386	418	451	483	515	547	579
600	134	168	202	235	269	302	336	369	403	437	470	504	537	571	605
650	146	182	218	255	291	327	364	400	437	473	509	546	582	619	655
700	157	196	235	274	313	353	392	431	470	509	549	588	627	666	705
750	168	210	252	294	336	378	420	462	504	546	588	630	672	714	756
800	179	224	269	313	358	403	448	493	537	582	627	672	717	761	806
850	190	238	285	333	381	428	476	523	571	619	666	714	761	809	856
900	202	252	302	353	403	453	504	554	605	655	705	756	806	856	907

Gear Box...Med. Gear **RATE CHART KG. PER HA**

Material Density Cu. M 0.85 Figures in body of chart = mm of door opening

Width.	8	10	12	14	16	18	20	22	24	26	28	30	32	34	36
Rate	-	-	-	-	-	-	-	-	-	-	-	-	-	-	-------
80	No	No	25	30	34	38	42	46	51	55	59	63	67	72	76
90	No	No	28	33	38	43	47	52	57	62	66	71	76	81	85
100	No	26	32	37	42	47	53	58	63	68	74	79	84	90	95
110	No	29	35	41	46	52	58	64	70	75	81	87	93	99	104
120	25	32	38	44	51	57	63	70	76	82	89	95	101	107	114
130	27	34	41	48	55	62	68	75	82	89	96	103	110	116	123
140	30	37	44	52	59	66	74	81	89	96	103	111	118	125	133
150	32	40	47	55	63	71	79	87	95	103	111	119	126	134	142
160	34	42	51	59	67	76	84	93	101	110	118	126	135	143	152
170	36	45	54	63	72	81	90	99	107	116	125	134	143	152	161
180	38	47	57	66	76	85	95	104	114	123	133	142	152	161	171
190	40	50	60	70	80	90	100	110	120	130	140	150	160	170	180
200	42	53	63	74	84	95	105	116	126	137	148	158	169	179	190
210	44	55	66	77	89	100	111	122	133	144	155	166	177	188	199
220	46	58	70	81	93	104	116	127	139	151	162	174	185	197	209
230	48	61	73	85	97	109	121	133	145	158	170	182	194	206	218
240	51	63	76	89	101	114	126	139	152	164	177	190	202	215	228
250	53	66	79	92	105	119	132	145	158	171	184	198	211	224	237
260	55	68	82	96	110	123	137	151	164	178	192	205	219	233	247
270	57	71	85	100	114	128	142	156	171	185	199	213	228	242	256
280	59	74	89	103	118	133	148	162	177	192	207	221	236	251	266
290	61	76	92	107	122	138	153	168	183	199	214	229	244	260	275
300	63	79	95	111	126	142	158	174	190	205	221	237	253	269	285
320	67	84	101	118	135	152	169	185	202	219	236	253	270	287	303
340	72	90	107	125	143	161	179	197	215	233	251	269	287	305	322
360	76	95	114	133	152	171	190	209	228	247	266	285	303	322	341
380	80	100	120	140	160	180	200	220	240	260	280	300	320	340	360
400	84	105	126	148	169	190	211	232	253	274	295	316	337	358	379
425	90	112	134	157	179	202	224	246	269	291	313	336	358	381	403
450	95	119	142	166	190	213	237	261	285	308	332	356	379	403	427
475	100	125	150	175	200	225	250	275	300	325	350	375	400	425	450
500	105	132	158	184	211	237	263	290	316	342	369	395	421	448	474
525	111	138	166	194	221	249	277	304	332	360	387	415	443	470	498
550	116	145	174	203	232	261	290	319	348	377	406	435	464	493	522
575	121	151	182	212	242	273	303	333	364	394	424	454	485	515	545
600	126	158	190	221	253	285	316	348	379	411	443	474	506	537	569
650	137	171	205	240	274	308	342	377	411	445	479	514	548	582	616
700	148	184	221	258	295	332	369	406	443	479	516	553	590	627	664
750	158	198	237	277	316	356	395	435	474	514	553	593	632	672	711
800	169	211	253	295	337	379	421	464	506	548	590	632	674	717	759
850	179	224	269	313	358	403	448	493	537	582	627	672	717	761	806
900	190	237	285	332	379	427	474	522	569	616	664	711	759	806	854

Gear Box...Med. Gear **RATE CHART KG. PER HA**

Material Density Cu. M 0.90 Figures in body of chart = mm of door opening

Width.	8	10	12	14	16	18	20	22	24	26	28	30	32	34	36
Rate	-	-	-	-	-	-	-	-	-	-	-	-	-	-	-------
80	No	No	No	28	32	36	40	44	48	52	56	60	64	68	72
90	No	No	27	31	36	40	45	49	54	58	63	67	72	76	81
100	No	No	30	35	40	45	50	55	60	65	70	75	80	85	90
110	No	27	33	38	44	49	55	60	66	71	77	82	88	93	99
120	No	30	36	42	48	54	60	66	72	78	84	90	96	102	107
130	26	32	39	45	52	58	65	71	78	84	91	97	103	110	116
140	28	35	42	49	56	63	70	77	84	91	98	104	111	118	125
150	30	37	45	52	60	67	75	82	90	97	104	112	119	127	134
160	32	40	48	56	64	72	80	88	96	103	111	119	127	135	143
170	34	42	51	59	68	76	85	93	102	110	118	127	135	144	152
180	36	45	54	63	72	81	90	99	107	116	125	134	143	152	161
190	38	47	57	66	76	85	95	104	113	123	132	142	151	161	170
200	40	50	60	70	80	90	100	109	119	129	139	149	159	169	179
210	42	52	63	73	84	94	104	115	125	136	146	157	167	178	188
220	44	55	66	77	88	99	109	120	131	142	153	164	175	186	197
230	46	57	69	80	92	103	114	126	137	149	160	172	183	195	206
240	48	60	72	84	96	107	119	131	143	155	167	179	191	203	215
250	50	62	75	87	100	112	124	137	149	162	174	187	199	211	224
260	52	65	78	91	103	116	129	142	155	168	181	194	207	220	233
270	54	67	81	94	107	121	134	148	161	175	188	202	215	228	242
280	56	70	84	98	111	125	139	153	167	181	195	209	223	237	251
290	58	72	87	101	115	130	144	159	173	188	202	216	231	245	260
300	60	75	90	104	119	134	149	164	179	194	209	224	239	254	269
320	64	80	96	111	127	143	159	175	191	207	223	239	255	271	287
340	68	85	102	118	135	152	169	186	203	220	237	254	271	288	305
360	72	90	107	125	143	161	179	197	215	233	251	269	287	305	322
380	76	95	113	132	151	170	189	208	227	246	265	284	303	321	340
400	80	100	119	139	159	179	199	219	239	259	279	299	318	338	358
425	85	106	127	148	169	190	211	233	254	275	296	317	338	360	381
450	90	112	134	157	179	202	224	246	269	291	313	336	358	381	403
475	95	118	142	165	189	213	236	260	284	307	331	355	378	402	425
500	100	124	149	174	199	224	249	274	299	323	348	373	398	423	448
525	104	131	157	183	209	235	261	287	313	340	366	392	418	444	470
550	109	137	164	192	219	246	274	301	328	356	383	411	438	465	493
575	114	143	172	200	229	257	286	315	343	372	401	429	458	486	515
600	119	149	179	209	239	269	299	328	358	388	418	448	478	508	537
650	129	162	194	226	259	291	323	356	388	420	453	485	517	550	582
700	139	174	209	244	279	313	348	383	418	453	488	522	557	592	627
750	149	187	224	261	299	336	373	411	448	485	522	560	597	634	672
800	159	199	239	279	318	358	398	438	478	517	557	597	637	677	717
850	169	211	254	296	338	381	423	465	508	550	592	634	677	719	761
900	179	224	269	313	358	403	448	493	537	582	627	672	717	761	806

Gear Box...Med. Gear **RATE CHART KG. PER HA.**

Material Density Cu. M 0.95 Figures in body of chart = mm of door opening

Width.	8	10	12	14	16	18	20	22	24	26	28	30	32	34	36
Rate	-	-	-	-	-	-	-	-	-	-	-	-	-	-	------
80	No	No	No	26	30	34	38	41	45	49	53	57	60	64	68
90	No	No	25	30	34	38	42	47	51	55	59	64	68	72	76
100	No	No	28	33	38	42	47	52	57	61	66	71	75	80	85
110	No	26	31	36	41	47	52	57	62	67	73	78	83	88	93
120	No	28	34	40	45	51	57	62	68	74	79	85	91	96	102
130	No	31	37	43	49	55	61	67	74	80	86	92	98	104	110
140	26	33	40	46	53	59	66	73	79	86	92	99	106	112	119
150	28	35	42	49	57	64	71	78	85	92	99	106	113	120	127
160	30	38	45	53	60	68	75	83	91	98	106	113	121	128	136
170	32	40	48	56	64	72	80	88	96	104	112	120	128	136	144
180	34	42	51	59	68	76	85	93	102	110	119	127	136	144	153
190	36	45	54	63	72	81	90	99	107	116	125	134	143	152	161
200	38	47	57	66	75	85	94	104	113	123	132	141	151	160	170
210	40	49	59	69	79	89	99	109	119	129	139	148	158	168	178
220	41	52	62	73	83	93	104	114	124	135	145	156	166	176	187
230	43	54	65	76	87	98	108	119	130	141	152	163	173	184	195
240	45	57	68	79	91	102	113	124	136	147	158	170	181	192	204
250	47	59	71	82	94	106	118	130	141	153	165	177	189	200	212
260	49	61	74	86	98	110	123	135	147	159	172	184	196	208	221
270	51	64	76	89	102	115	127	140	153	165	178	191	204	216	229
280	53	66	79	92	106	119	132	145	158	172	185	198	211	224	238
290	55	68	82	96	109	123	137	150	164	178	191	205	219	232	246
300	57	71	85	99	113	127	141	156	170	184	198	212	226	240	255
320	60	75	91	106	121	136	151	166	181	196	211	226	241	256	272
340	64	80	96	112	128	144	160	176	192	208	224	240	256	272	288
360	68	85	102	119	136	153	170	187	204	221	238	255	272	288	305
380	72	90	107	125	143	161	179	197	215	233	251	269	287	305	322
400	75	94	113	132	151	170	189	207	226	245	264	283	302	321	339
425	80	100	120	140	160	180	200	220	240	260	280	301	321	341	361
450	85	106	127	148	170	191	212	233	255	276	297	318	339	361	382
475	90	112	134	157	179	202	224	246	269	291	313	336	358	381	403
500	94	118	141	165	189	212	236	259	283	306	330	354	377	401	424
525	99	124	148	173	198	223	247	272	297	322	346	371	396	421	445
550	104	130	156	181	207	233	259	285	311	337	363	389	415	441	467
575	108	136	163	190	217	244	271	298	325	352	379	407	434	461	488
600	113	141	170	198	226	255	283	311	339	368	396	424	453	481	509
650	123	153	184	214	245	276	306	337	368	398	429	460	490	521	552
700	132	165	198	231	264	297	330	363	396	429	462	495	528	561	594
750	141	177	212	247	283	318	354	389	424	460	495	530	566	601	636
800	151	189	226	264	302	339	377	415	453	490	528	566	603	641	679
850	160	200	240	280	321	361	401	441	481	521	561	601	641	681	721
900	170	212	255	297	339	382	424	467	509	552	594	636	679	721	764

Gear Box...Med. Gear **RATE CHART KG. PER HA.**

Material Density Cu. M 1.00 Figures in body of chart = mm of door opening

Width.	8	10	12	14	16	18	20	22	24	26	28	30	32	34	36
Rate	-	-	-	-	-	-	-	-	-	-	-	-	-	-	------
80	No	No	No	25	29	32	36	39	43	47	50	54	57	61	64
90	No	No	No	28	32	36	40	44	48	52	56	60	64	69	73
100	No	No	27	31	36	40	45	49	54	58	63	67	72	76	81
110	No	No	30	34	39	44	49	54	59	64	69	74	79	84	89
120	No	27	32	38	43	48	54	59	64	70	75	81	86	91	97
130	No	29	35	41	47	52	58	64	70	76	82	87	93	99	105
140	25	31	38	44	50	56	63	69	75	82	88	94	100	107	113
150	27	34	40	47	54	60	67	74	81	87	94	101	107	114	121
160	29	36	43	50	57	64	72	79	86	93	100	107	115	122	129
170	30	38	46	53	61	69	76	84	91	99	107	114	122	129	137
180	32	40	48	56	64	73	81	89	97	105	113	121	129	137	145
190	34	43	51	60	68	77	85	94	102	111	119	128	136	145	153
200	36	45	54	63	72	81	90	99	107	116	125	134	143	152	161
210	38	47	56	66	75	85	94	103	113	122	132	141	150	160	169
220	39	49	59	69	79	89	99	108	118	128	138	148	158	167	177
230	41	51	62	72	82	93	103	113	124	134	144	154	165	175	185
240	43	54	64	75	86	97	107	118	129	140	150	161	172	183	193
250	45	56	67	78	90	101	112	123	134	146	157	168	179	190	202
260	47	58	70	82	93	105	116	128	140	151	163	175	186	198	210
270	48	60	73	85	97	109	121	133	145	157	169	181	193	206	218
280	50	63	75	88	100	113	125	138	150	163	176	188	201	213	226
290	52	65	78	91	104	117	130	143	156	169	182	195	208	221	234
300	54	67	81	94	107	121	134	148	161	175	188	202	215	228	242
320	57	72	86	100	115	129	143	158	172	186	201	215	229	244	258
340	61	76	91	107	122	137	152	167	183	198	213	228	244	259	274
360	64	81	97	113	129	145	161	177	193	210	226	242	258	274	290
380	68	85	102	119	136	153	170	187	204	221	238	255	272	289	306
400	72	90	107	125	143	161	179	197	215	233	251	269	287	305	322
425	76	95	114	133	152	171	190	209	228	247	266	285	305	324	343
450	81	101	121	141	161	181	202	222	242	262	282	302	322	343	363
475	85	106	128	149	170	191	213	234	255	277	298	319	340	362	383
500	90	112	134	157	179	202	224	246	269	291	313	336	358	381	403
525	94	118	141	165	188	212	235	259	282	306	329	353	376	400	423
550	99	123	148	172	197	222	246	271	296	320	345	369	394	419	443
575	103	129	154	180	206	232	257	283	309	335	360	386	412	438	463
600	107	134	161	188	215	242	269	296	322	349	376	403	430	457	484
650	116	146	175	204	233	262	291	320	349	378	408	437	466	495	524
700	125	157	188	219	251	282	313	345	376	408	439	470	502	533	564
750	134	168	202	235	269	302	336	369	403	437	470	504	537	571	605
800	143	179	215	251	287	322	358	394	430	466	502	537	573	609	645
850	152	190	228	266	305	343	381	419	457	495	533	571	609	647	685
900	161	202	242	282	322	363	403	443	484	524	564	605	645	685	725

Gear Box...Med. Gear **RATE CHART KG. PER HA.**

Material Density Cu. M 1.05 Figures in body of chart = mm of door opening

Width.	8	10	12	14	16	18	20	22	24	26	28	30	32	34	36
Rate	-	-	-	-	-	-	-	-	-	-	-	-	-	-	------
80	No	No	No	No	27	31	34	38	41	44	48	51	55	58	61
90	No	No	No	27	31	35	38	42	46	50	54	58	61	65	69
100	No	No	26	30	34	38	43	47	51	55	60	64	68	73	77
110	No	No	28	33	38	42	47	52	56	61	66	70	75	80	84
120	No	26	31	36	41	46	51	56	61	67	72	77	82	87	92
130	No	28	33	39	44	50	55	61	67	72	78	83	89	94	100
140	No	30	36	42	48	54	60	66	72	78	84	90	96	102	107
150	26	32	38	45	51	58	64	70	77	83	90	96	102	109	115
160	27	34	41	48	55	61	68	75	82	89	96	102	109	116	123
170	29	36	44	51	58	65	73	80	87	94	102	109	116	123	131
180	31	38	46	54	61	69	77	84	92	100	107	115	123	131	138
190	32	41	49	57	65	73	81	89	97	105	113	122	130	138	146
200	34	43	51	60	68	77	85	94	102	111	119	128	136	145	154
210	36	45	54	63	72	81	90	99	107	116	125	134	143	152	161
220	38	47	56	66	75	84	94	103	113	122	131	141	150	160	169
230	39	49	59	69	78	88	98	108	118	128	137	147	157	167	177
240	41	51	61	72	82	92	102	113	123	133	143	154	164	174	184
250	43	53	64	75	85	96	107	117	128	139	149	160	171	181	192
260	44	55	67	78	89	100	111	122	133	144	155	166	177	189	200
270	46	58	69	81	92	104	115	127	138	150	161	173	184	196	207
280	48	60	72	84	96	107	119	131	143	155	167	179	191	203	215
290	49	62	74	87	99	111	124	136	148	161	173	186	198	210	223
300	51	64	77	90	102	115	128	141	154	166	179	192	205	218	230
320	55	68	82	96	109	123	136	150	164	177	191	205	218	232	246
340	58	73	87	102	116	131	145	160	174	189	203	218	232	247	261
360	61	77	92	107	123	138	154	169	184	200	215	230	246	261	276
380	65	81	97	113	130	146	162	178	194	211	227	243	259	276	292
400	68	85	102	119	136	154	171	188	205	222	239	256	273	290	307
425	73	91	109	127	145	163	181	199	218	236	254	272	290	308	326
450	77	96	115	134	154	173	192	211	230	250	269	288	307	326	345
475	81	101	122	142	162	182	203	223	243	263	284	304	324	344	365
500	85	107	128	149	171	192	213	235	256	277	299	320	341	363	384
525	90	112	134	157	179	202	224	246	269	291	313	336	358	381	403
550	94	117	141	164	188	211	235	258	281	305	328	352	375	399	422
575	98	123	147	172	196	221	245	270	294	319	343	368	392	417	441
600	102	128	154	179	205	230	256	281	307	333	358	384	409	435	461
650	111	139	166	194	222	250	277	305	333	360	388	416	444	471	499
700	119	149	179	209	239	269	299	328	358	388	418	448	478	508	537
750	128	160	192	224	256	288	320	352	384	416	448	480	512	544	576
800	136	171	205	239	273	307	341	375	409	444	478	512	546	580	614
850	145	181	218	254	290	326	363	399	435	471	508	544	580	616	653
900	154	192	230	269	307	345	384	422	461	499	537	576	614	653	691

Gear Box...Med. Gear **RATE CHART KG. PER HA.**

Material Density Cu. M 1.10 Figures in body of chart = mm of door opening

Width.	8	10	12	14	16	18	20	22	24	26	28	30	32	34	36
Rate	-	-	-	-	-	-	-	-	-	-	-	-	-	-	------
80	No	No	No	No	26	29	33	36	39	42	46	49	52	55	59
90	No	No	No	26	29	33	37	40	44	48	51	55	59	62	66
100	No	No	No	28	33	37	41	45	49	53	57	61	65	69	73
110	No	No	27	31	36	40	45	49	54	58	63	67	72	76	81
120	No	No	29	34	39	44	49	54	59	64	68	73	78	83	88
130	No	26	32	37	42	48	53	58	64	69	74	79	85	90	95
140	No	28	34	40	46	51	57	63	68	74	80	85	91	97	103
150	No	31	37	43	49	55	61	67	73	79	85	92	98	104	110
160	26	33	39	46	52	59	65	72	78	85	91	98	104	111	117
170	28	35	42	48	55	62	69	76	83	90	97	104	111	118	125
180	29	37	44	51	59	66	73	81	88	95	103	110	117	125	132
190	31	39	46	54	62	70	77	85	93	101	108	116	124	131	139
200	33	41	49	57	65	73	81	90	98	106	114	122	130	138	147
210	34	43	51	60	68	77	85	94	103	111	120	128	137	145	154
220	36	45	54	63	72	81	90	99	107	116	125	134	143	152	161
230	37	47	56	66	75	84	94	103	112	122	131	140	150	159	169
240	39	49	59	68	78	88	98	107	117	127	137	147	156	166	176
250	41	51	61	71	81	92	102	112	122	132	142	153	163	173	183
260	42	53	64	74	85	95	106	116	127	138	148	159	169	180	191
270	44	55	66	77	88	99	110	121	132	143	154	165	176	187	198
280	46	57	68	80	91	103	114	125	137	148	160	171	182	194	205
290	47	59	71	83	94	106	118	130	142	153	165	177	189	201	213
300	49	61	73	85	98	110	122	134	147	159	171	183	195	208	220
320	52	65	78	91	104	117	130	143	156	169	182	195	208	221	234
340	55	69	83	97	111	125	138	152	166	180	194	208	221	235	249
360	59	73	88	103	117	132	147	161	176	191	205	220	234	249	264
380	62	77	93	108	124	139	155	170	186	201	217	232	248	263	278
400	65	81	98	114	130	147	163	179	195	212	228	244	261	277	293
425	69	87	104	121	138	156	173	190	208	225	242	260	277	294	311
450	73	92	110	128	147	165	183	202	220	238	256	275	293	311	330
475	77	97	116	135	155	174	193	213	232	251	271	290	309	329	348
500	81	102	122	142	163	183	204	224	244	265	285	305	326	346	366
525	85	107	128	150	171	192	214	235	256	278	299	321	342	363	385
550	90	112	134	157	179	202	224	246	269	291	313	336	358	381	403
575	94	117	140	164	187	211	234	257	281	304	328	351	375	398	421
600	98	122	147	171	195	220	244	269	293	318	342	366	391	415	440
650	106	132	159	185	212	238	265	291	318	344	370	397	423	450	476
700	114	142	171	199	228	256	285	313	342	370	399	427	456	484	513
750	122	153	183	214	244	275	305	336	366	397	427	458	489	519	550
800	130	163	195	228	261	293	326	358	391	423	456	489	521	554	586
850	138	173	208	242	277	311	346	381	415	450	484	519	554	588	623
900	147	183	220	256	293	330	366	403	440	476	513	550	586	623	660

Gear Box...Med. Gear **RATE CHART KG. PER HA**

Material Density Cu. M 1.15 Figures in body of chart = mm of door opening

Width.	8	10	12	14	16	18	20	22	24	26	28	30	32	34	36
Rate	-	-	-	-	-	-	-	-	-	-	-	-	-	-	------
80	No	No	No	No	No	28	31	34	37	40	44	47	50	53	56
90	No	No	No	No	28	32	35	39	42	46	49	53	56	60	63
100	No	No	No	27	31	35	39	43	47	51	55	58	62	66	70
110	No	No	26	30	34	39	43	47	51	56	60	64	69	73	77
120	No	No	28	33	37	42	47	51	56	61	65	70	75	79	84
130	No	25	30	35	40	46	51	56	61	66	71	76	81	86	91
140	No	27	33	38	44	49	55	60	65	71	76	82	87	93	98
150	No	29	35	41	47	53	58	64	70	76	82	88	93	99	105
160	No	31	37	44	50	56	62	69	75	81	87	93	100	106	112
170	26	33	40	46	53	60	66	73	79	86	93	99	106	113	119
180	28	35	42	49	56	63	70	77	84	91	98	105	112	119	126
190	30	37	44	52	59	67	74	81	89	96	104	111	118	126	133
200	31	39	47	55	62	70	78	86	93	101	109	117	125	132	140
210	33	41	49	57	65	74	82	90	98	106	114	123	131	139	147
220	34	43	51	60	69	77	86	94	103	111	120	129	137	146	154
230	36	45	54	63	72	81	90	99	107	116	125	134	143	152	161
240	37	47	56	65	75	84	93	103	112	121	131	140	150	159	168
250	39	49	58	68	78	88	97	107	117	127	136	146	156	166	175
260	40	51	61	71	81	91	101	111	121	132	142	152	162	172	182
270	42	53	63	74	84	95	105	116	126	137	147	158	168	179	189
280	44	55	65	76	87	98	109	120	131	142	153	164	174	185	196
290	45	56	68	79	90	102	113	124	136	147	158	169	181	192	203
300	47	58	70	82	93	105	117	129	140	152	164	175	187	199	210
320	50	62	75	87	100	112	125	137	150	162	174	187	199	212	224
340	53	66	79	93	106	119	132	146	159	172	185	199	212	225	238
360	56	70	84	98	112	126	140	154	168	182	196	210	224	238	252
380	59	74	89	104	118	133	148	163	178	192	207	222	237	252	266
400	62	78	93	109	125	140	156	171	187	202	218	234	249	265	280
425	66	83	99	116	132	149	166	182	199	215	232	248	265	281	298
450	70	88	105	123	140	158	175	193	210	228	245	263	280	298	315
475	74	92	111	129	148	166	185	203	222	240	259	277	296	314	333
500	78	97	117	136	156	175	195	214	234	253	273	292	312	331	350
525	82	102	123	143	164	184	204	225	245	266	286	307	327	348	368
550	86	107	129	150	171	193	214	236	257	278	300	321	343	364	386
575	90	112	134	157	179	202	224	246	269	291	313	336	358	381	403
600	93	117	140	164	187	210	234	257	280	304	327	350	374	397	421
650	101	127	152	177	202	228	253	278	304	329	354	380	405	430	456
700	109	136	164	191	218	245	273	300	327	354	382	409	436	463	491
750	117	146	175	204	234	263	292	321	350	380	409	438	467	497	526
800	125	156	187	218	249	280	312	343	374	405	436	467	498	530	561
850	132	166	199	232	265	298	331	364	397	430	463	497	530	563	596
900	140	175	210	245	280	315	350	386	421	456	491	526	561	596	631

Gear Box...Med. Gear **RATE CHART KG. PER HA**

Material Density Cu. M 1.20 Figures in body of chart = mm of door opening

Width.	8	10	12	14	16	18	20	22	24	26	28	30	32	34	36
Rate	-	-	-	-	-	-	-	-	-	-	-	-	-	-	------
80	No	No	No	No	No	27	30	33	36	39	42	45	48	51	54
90	No	No	No	No	27	30	34	37	40	44	47	50	54	57	60
100	No	No	No	26	30	34	37	41	45	49	52	56	60	63	67
110	No	No	No	29	33	37	41	45	49	53	57	62	66	70	74
120	No	No	27	31	36	40	45	49	54	58	63	67	72	76	81
130	No	No	29	34	39	44	49	53	58	63	68	73	78	82	87
140	No	26	31	37	42	47	52	57	63	68	73	78	84	89	94
150	No	28	34	39	45	50	56	62	67	73	78	84	90	95	101
160	No	30	36	42	48	54	60	66	72	78	84	90	96	102	107
170	25	32	38	44	51	57	63	70	76	82	89	95	102	108	114
180	27	34	40	47	54	60	67	74	81	87	94	101	107	114	121
190	28	35	43	50	57	64	71	78	85	92	99	106	113	121	128
200	30	37	45	52	60	67	75	82	90	97	104	112	119	127	134
210	31	39	47	55	63	71	78	86	94	102	110	118	125	133	141
220	33	41	49	57	66	74	82	90	99	107	115	123	131	140	148
230	34	43	51	60	69	77	86	94	103	112	120	129	137	146	154
240	36	45	54	63	72	81	90	99	107	116	125	134	143	152	161
250	37	47	56	65	75	84	93	103	112	121	131	140	149	159	168
260	39	49	58	68	78	87	97	107	116	126	136	146	155	165	175
270	40	50	60	71	81	91	101	111	121	131	141	151	161	171	181
280	42	52	63	73	84	94	104	115	125	136	146	157	167	178	188
290	43	54	65	76	87	97	108	119	130	141	152	162	173	184	195
300	45	56	67	78	90	101	112	123	134	146	157	168	179	190	202
320	48	60	72	84	96	107	119	131	143	155	167	179	191	203	215
340	51	63	76	89	102	114	127	140	152	165	178	190	203	216	228
360	54	67	81	94	107	121	134	148	161	175	188	202	215	228	242
380	57	71	85	99	113	128	142	156	170	184	199	213	227	241	255
400	60	75	90	104	119	134	149	164	179	194	209	224	239	254	269
425	63	79	95	111	127	143	159	174	190	206	222	238	254	270	285
450	67	84	101	118	134	151	168	185	202	218	235	252	269	285	302
475	71	89	106	124	142	160	177	195	213	230	248	266	284	301	319
500	75	93	112	131	149	168	187	205	224	243	261	280	299	317	336
525	78	98	118	137	157	176	196	216	235	255	274	294	313	333	353
550	82	103	123	144	164	185	205	226	246	267	287	308	328	349	369
575	86	107	129	150	172	193	215	236	257	279	300	322	343	365	386
600	90	112	134	157	179	202	224	246	269	291	313	336	358	381	403
650	97	121	146	170	194	218	243	267	291	315	340	364	388	412	437
700	104	131	157	183	209	235	261	287	313	340	366	392	418	444	470
750	112	140	168	196	224	252	280	308	336	364	392	420	448	476	504
800	119	149	179	209	239	269	299	328	358	388	418	448	478	508	537
850	127	159	190	222	254	285	317	349	381	412	444	476	508	539	571
900	134	168	202	235	269	302	336	369	403	437	470	504	537	571	605

Gear Box...Med. Gear **RATE CHART KG. PER HA.**

Material Density Cu. M 1.30 Figures in body of chart = mm of door opening

Width.	8	10	12	14	16	18	20	22	24	26	28	30	32	34	36
Rate	-	-	-	-	-	-	-	-	-	-	-	-	-	-	------
80	No	No	No	No	No	No	28	30	33	36	39	41	44	47	50
90	No	No	No	No	No	28	31	34	37	40	43	47	50	53	56
100	No	No	No	No	28	31	34	38	41	45	48	52	55	59	62
110	No	No	No	27	30	34	38	42	45	49	53	57	61	64	68
120	No	No	No	29	33	37	41	45	50	54	58	62	66	70	74
130	No	No	27	31	36	40	45	49	54	58	63	67	72	76	81
140	No	No	29	34	39	43	48	53	58	63	68	72	77	82	87
150	No	26	31	36	41	47	52	57	62	67	72	78	83	88	93
160	No	28	33	39	44	50	55	61	66	72	77	83	88	94	99
170	No	29	35	41	47	53	59	64	70	76	82	88	94	100	105
180	No	31	37	43	50	56	62	68	74	81	87	93	99	105	112
190	26	33	39	46	52	59	65	72	79	85	92	98	105	111	118
200	28	34	41	48	55	62	69	76	83	90	96	103	110	117	124
210	29	36	43	51	58	65	72	80	87	94	101	109	116	123	130
220	30	38	45	53	61	68	76	83	91	99	106	114	121	129	136
230	32	40	48	55	63	71	79	87	95	103	111	119	127	135	143
240	33	41	50	58	66	74	83	91	99	107	116	124	132	141	149
250	34	43	52	60	69	78	86	95	103	112	121	129	138	146	155
260	36	45	54	63	72	81	90	99	107	116	125	134	143	152	161
270	37	47	56	65	74	84	93	102	112	121	130	140	149	158	167
280	39	48	58	68	77	87	96	106	116	125	135	145	154	164	174
290	40	50	60	70	80	90	100	110	120	130	140	150	160	170	180
300	41	52	62	72	83	93	103	114	124	134	145	155	165	176	186
320	44	55	66	77	88	99	110	121	132	143	154	165	176	187	198
340	47	59	70	82	94	105	117	129	141	152	164	176	187	199	211
360	50	62	74	87	99	112	124	136	149	161	174	186	198	211	223
380	52	65	79	92	105	118	131	144	157	170	183	196	209	223	236
400	55	69	83	96	110	124	138	152	165	179	193	207	220	234	248
425	59	73	88	102	117	132	146	161	176	190	205	220	234	249	264
450	62	78	93	109	124	140	155	171	186	202	217	233	248	264	279
475	65	82	98	115	131	147	164	180	196	213	229	245	262	278	295
500	69	86	103	121	138	155	172	189	207	224	241	258	276	293	310
525	72	90	109	127	145	163	181	199	217	235	253	271	289	307	326
550	76	95	114	133	152	171	189	208	227	246	265	284	303	322	341
575	79	99	119	139	158	178	198	218	238	257	277	297	317	337	357
600	83	103	124	145	165	186	207	227	248	269	289	310	331	351	372
650	90	112	134	157	179	202	224	246	269	291	313	336	358	381	403
700	96	121	145	169	193	217	241	265	289	313	338	362	386	410	434
750	103	129	155	181	207	233	258	284	310	336	362	388	413	439	465
800	110	138	165	193	220	248	276	303	331	358	386	413	441	468	496
850	117	146	176	205	234	264	293	322	351	381	410	439	468	498	527
900	124	155	186	217	248	279	310	341	372	403	434	465	496	527	558

Gear Box...Med. Gear **RATE CHART KG. PER HA.**

Material Density Cu. M 1.40 Figures in body of chart = mm of door opening

Width.	8	10	12	14	16	18	20	22	24	26	28	30	32	34	36
Rate	-	-	-	-	-	-	-	-	-	-	-	-	-	-	------
80	No	No	No	No	No	No	26	28	31	33	36	38	41	44	46
90	No	No	No	No	No	26	29	32	35	37	40	43	46	49	52
100	No	No	No	No	26	29	32	35	38	42	45	48	51	54	58
110	No	No	No	No	28	32	35	39	42	46	49	53	56	60	63
120	No	No	No	27	31	35	38	42	46	50	54	58	61	65	69
130	No	No	No	29	33	37	42	46	50	54	58	62	67	71	75
140	No	No	27	31	36	40	45	49	54	58	63	67	72	76	81
150	No	No	29	34	38	43	48	53	58	62	67	72	77	82	86
160	No	26	31	36	41	46	51	56	61	67	72	77	82	87	92
170	No	27	33	38	44	49	54	60	65	71	76	82	87	92	98
180	No	29	35	40	46	52	58	63	69	75	81	86	92	98	104
190	No	30	36	43	49	55	61	67	73	79	85	91	97	103	109
200	26	32	38	45	51	58	64	70	77	83	90	96	102	109	115
210	27	34	40	47	54	60	67	74	81	87	94	101	107	114	121
220	28	35	42	49	56	63	70	77	84	91	99	106	113	120	127
230	29	37	44	51	59	66	74	81	88	96	103	110	118	125	132
240	31	38	46	54	61	69	77	84	92	100	107	115	123	131	138
250	32	40	48	56	64	72	80	88	96	104	112	120	128	136	144
260	33	42	50	58	67	75	83	91	100	108	116	125	133	141	150
270	35	43	52	60	69	78	86	95	104	112	121	130	138	147	155
280	36	45	54	63	72	81	90	99	107	116	125	134	143	152	161
290	37	46	56	65	74	83	93	102	111	121	130	139	148	158	167
300	38	48	58	67	77	86	96	106	115	125	134	144	154	163	173
320	41	51	61	72	82	92	102	113	123	133	143	154	164	174	184
340	44	54	65	76	87	98	109	120	131	141	152	163	174	185	196
360	46	58	69	81	92	104	115	127	138	150	161	173	184	196	207
380	49	61	73	85	97	109	122	134	146	158	170	182	194	207	219
400	51	64	77	90	102	115	128	141	154	166	179	192	205	218	230
425	54	68	82	95	109	122	136	150	163	177	190	204	218	231	245
450	58	72	86	101	115	130	144	158	173	187	202	216	230	245	259
475	61	76	91	106	122	137	152	167	182	198	213	228	243	258	273
500	64	80	96	112	128	144	160	176	192	208	224	240	256	272	288
525	67	84	101	118	134	151	168	185	202	218	235	252	269	285	302
550	70	88	106	123	141	158	176	194	211	229	246	264	281	299	317
575	74	92	110	129	147	166	184	202	221	239	257	276	294	313	331
600	77	96	115	134	154	173	192	211	230	250	269	288	307	326	345
650	83	104	125	146	166	187	208	229	250	270	291	312	333	353	374
700	90	112	134	157	179	202	224	246	269	291	313	336	358	381	403
750	96	120	144	168	192	216	240	264	288	312	336	360	384	408	432
800	102	128	154	179	205	230	256	281	307	333	358	384	409	435	461
850	109	136	163	190	218	245	272	299	326	353	381	408	435	462	489
900	115	144	173	202	230	259	288	317	345	374	403	432	461	489	518

Gear Box...Med. Gear **RATE CHART KG. PER HA.**

Material Density Cu. M 1.50 Figures in body of chart = mm of door opening

Width.	8	10	12	14	16	18	20	22	24	26	28	30	32	34	36
Rate	-	-	-	-	-	-	-	-	-	-	-	-	-	-	------
80	No	No	No	No	No	No	No	26	29	31	33	36	38	41	43
90	No	No	No	No	No	No	27	30	32	35	38	40	43	46	48
100	No	No	No	No	No	27	30	33	36	39	42	45	48	51	54
110	No	No	No	No	26	30	33	36	39	43	46	49	53	56	59
120	No	No	No	25	29	32	36	39	43	47	50	54	57	61	64
130	No	No	No	27	31	35	39	43	47	50	54	58	62	66	70
140	No	No	25	29	33	38	42	46	50	54	59	63	67	71	75
150	No	No	27	31	36	40	45	49	54	58	63	67	72	76	81
160	No	No	29	33	38	43	48	53	57	62	67	72	76	81	86
170	No	25	30	36	41	46	51	56	61	66	71	76	81	86	91
180	No	27	32	38	43	48	54	59	64	70	75	81	86	91	97
190	No	28	34	40	45	51	57	62	68	74	79	85	91	96	102
200	No	30	36	42	48	54	60	66	72	78	84	90	96	102	107
210	25	31	38	44	50	56	63	69	75	82	88	94	100	107	113
220	26	33	39	46	53	59	66	72	79	85	92	99	105	112	118
230	27	34	41	48	55	62	69	76	82	89	96	103	110	117	124
240	29	36	43	50	57	64	72	79	86	93	100	107	115	122	129
250	30	37	45	52	60	67	75	82	90	97	104	112	119	127	134
260	31	39	47	54	62	70	78	85	93	101	109	116	124	132	140
270	32	40	48	56	64	73	81	89	97	105	113	121	129	137	145
280	33	42	50	59	67	75	84	92	100	109	117	125	134	142	150
290	35	43	52	61	69	78	87	95	104	113	121	130	139	147	156
300	36	45	54	63	72	81	90	99	107	116	125	134	143	152	161
320	38	48	57	67	76	86	96	105	115	124	134	143	153	162	172
340	41	51	61	71	81	91	102	112	122	132	142	152	162	173	183
360	43	54	64	75	86	97	107	118	129	140	150	161	172	183	193
380	45	57	68	79	91	102	113	125	136	147	159	170	182	193	204
400	48	60	72	84	96	107	119	131	143	155	167	179	191	203	215
425	51	63	76	89	102	114	127	140	152	165	178	190	203	216	228
450	54	67	81	94	107	121	134	148	161	175	188	202	215	228	242
475	57	71	85	99	113	128	142	156	170	184	199	213	227	241	255
500	60	75	90	104	119	134	149	164	179	194	209	224	239	254	269
525	63	78	94	110	125	141	157	172	188	204	219	235	251	266	282
550	66	82	99	115	131	148	164	181	197	213	230	246	263	279	296
575	69	86	103	120	137	154	172	189	206	223	240	257	275	292	309
600	72	90	107	125	143	161	179	197	215	233	251	269	287	305	322
650	78	97	116	136	155	175	194	213	233	252	272	291	310	330	349
700	84	104	125	146	167	188	209	230	251	272	293	313	334	355	376
750	90	112	134	157	179	202	224	246	269	291	313	336	358	381	403
800	96	119	143	167	191	215	239	263	287	310	334	358	382	406	430
850	102	127	152	178	203	228	254	279	305	330	355	381	406	431	457
900	107	134	161	188	215	242	269	296	322	349	376	403	430	457	484

Gear Box...Med. Gear **RATE CHART KG. PER HA.**

Material Density Cu. M 1.60 Figures in body of chart = mm of door opening

Width.	8	10	12	14	16	18	20	22	24	26	28	30	32	34	36
Rate	-	-	-	-	-	-	-	-	-	-	-	-	-	-	------
80	No	No	No	No	No	No	No	No	27	29	31	34	36	38	40
90	No	No	No	No	No	No	25	28	30	33	35	38	40	43	45
100	No	No	No	No	No	25	28	31	34	36	39	42	45	48	50
110	No	No	No	No	No	28	31	34	37	40	43	46	49	52	55
120	No	No	No	No	27	30	34	37	40	44	47	50	54	57	60
130	No	No	No	25	29	33	36	40	44	47	51	55	58	62	65
140	No	No	No	27	31	35	39	43	47	51	55	59	63	67	71
150	No	No	25	29	34	38	42	46	50	55	59	63	67	71	76
160	No	No	27	31	36	40	45	49	54	58	63	67	72	76	81
170	No	No	29	33	38	43	48	52	57	62	67	71	76	81	86
180	No	25	30	35	40	45	50	55	60	65	71	76	81	86	91
190	No	27	32	37	43	48	53	58	64	69	74	80	85	90	96
200	No	28	34	39	45	50	56	62	67	73	78	84	90	95	101
210	No	29	35	41	47	53	59	65	71	76	82	88	94	100	106
220	No	31	37	43	49	55	62	68	74	80	86	92	99	105	111
230	26	32	39	45	51	58	64	71	77	84	90	97	103	109	116
240	27	34	40	47	54	60	67	74	81	87	94	101	107	114	121
250	28	35	42	49	56	63	70	77	84	91	98	105	112	119	126
260	29	36	44	51	58	65	73	80	87	95	102	109	116	124	131
270	30	38	45	53	60	68	76	83	91	98	106	113	121	128	136
280	31	39	47	55	63	71	78	86	94	102	110	118	125	133	141
290	32	41	49	57	65	73	81	89	97	106	114	122	130	138	146
300	34	42	50	59	67	76	84	92	101	109	118	126	134	143	151
320	36	45	54	63	72	81	90	99	107	116	125	134	143	152	161
340	38	48	57	67	76	86	95	105	114	124	133	143	152	162	171
360	40	50	60	71	81	91	101	111	121	131	141	151	161	171	181
380	43	53	64	74	85	96	106	117	128	138	149	160	170	181	191
400	45	56	67	78	90	101	112	123	134	146	157	168	179	190	202
425	48	59	71	83	95	107	119	131	143	155	167	178	190	202	214
450	50	63	76	88	101	113	126	139	151	164	176	189	202	214	227
475	53	66	80	93	106	120	133	146	160	173	186	199	213	226	239
500	56	70	84	98	112	126	140	154	168	182	196	210	224	238	252
525	59	73	88	103	118	132	147	162	176	191	206	220	235	250	264
550	62	77	92	108	123	139	154	169	185	200	216	231	246	262	277
575	64	80	97	113	129	145	161	177	193	209	225	241	257	274	290
600	67	84	101	118	134	151	168	185	202	218	235	252	269	285	302
650	73	91	109	127	146	164	182	200	218	237	255	273	291	309	327
700	78	98	118	137	157	176	196	216	235	255	274	294	313	333	353
750	84	105	126	147	168	189	210	231	252	273	294	315	336	357	378
800	90	112	134	157	179	202	224	246	269	291	313	336	358	381	403
850	95	119	143	167	190	214	238	262	285	309	333	357	381	404	428
900	101	126	151	176	202	227	252	277	302	327	353	378	403	428	453

Gear Box...Med. Gear **RATE CHART KG. PER HA.**

Material Density Cu. M 0.75 Figures in body of chart = mm of door opening

Width.	8	10	12	14	16	18	20	22	24	26	28	30	32	34	36
Rate	-	-	-	-	-	-	-	-	-	-	-	-	-	-	-------
400	96	119	143	167	191	215	239	263	287	310	334	358	382	406	430
425	102	127	152	178	203	228	254	279	305	330	355	381	406	431	457
450	107	134	161	188	215	242	269	296	322	349	376	403	430	457	484
475	113	142	170	199	227	255	284	312	340	369	397	425	454	482	511
500	119	149	179	209	239	269	299	328	358	388	418	448	478	508	537
525	125	157	188	219	251	282	313	345	376	408	439	470	502	533	564
550	131	164	197	230	263	296	328	361	394	427	460	493	525	558	591
575	137	172	206	240	275	309	343	378	412	446	481	515	549	584	618
600	143	179	215	251	287	322	358	394	430	466	502	537	573	609	645
625	149	187	224	261	299	336	373	411	448	485	522	560	597	634	672
650	155	194	233	272	310	349	388	427	466	505	543	582	621	660	699
675	161	202	242	282	322	363	403	443	484	524	564	605	645	685	725
700	167	209	251	293	334	376	418	460	502	543	585	627	669	711	752
750	179	224	269	313	358	403	448	493	537	582	627	672	717	761	806
800	191	239	287	334	382	430	478	525	573	621	669	717	764	812	860
850	203	254	305	355	406	457	508	558	609	660	711	761	812	863	914
900	215	269	322	376	430	484	537	591	645	699	752	806	860	914	967
950	227	284	340	397	454	511	567	624	681	737	794	851	908	964	1021
1000	239	299	358	418	478	537	597	657	717	776	836	896	955	1015	1075
1050	251	313	376	439	502	564	627	690	752	815	878	940	1003	1066	1129
1100	263	328	394	460	525	591	657	722	788	854	920	985	1051	1117	1182
1150	275	343	412	481	549	618	687	755	824	893	961	1030	1099	1167	1236
1200	287	358	430	502	573	645	717	788	860	931	1003	1075	1146	1218	1290
1250	299	373	448	522	597	672	746	821	896	970	1045	1120	1194	1269	1343
1300	310	388	466	543	621	699	776	854	931	1009	1087	1164	1242	1320	1397
1350	322	403	484	564	645	725	806	887	967	1048	1129	1209	1290	1370	1451
1400	334	418	502	585	669	752	836	920	1003	1087	1170	1254	1338	1421	1505
1450	346	433	519	606	693	779	866	952	1039	1126	1212	1299	1385	1472	1558
1500	358	448	537	627	717	806	896	985	1075	1164	1254	1343	1433	1523	1612
1550	370	463	555	648	740	833	926	1018	1111	1203	1296	1388	1481	1573	1666
1600	382	478	573	669	764	860	955	1051	1146	1242	1338	1433	1529	1624	1720
1650	394	493	591	690	788	887	985	1084	1182	1281	1379	1478	1576	1675	1773
1700	406	508	609	711	812	914	1015	1117	1218	1320	1421	1523	1624	1726	1827
1800	430	537	645	752	860	967	1075	1182	1290	1397	1505	1612	1720	1827	1935
1900	454	567	681	794	908	1021	1134	1248	1361	1475	1588	1702	1815	1929	2042
2000	478	597	717	836	955	1075	1194	1314	1433	1552	1672	1791	1911	2030	2150
2500	597	746	896	1045	1194	1343	1493	1642	1791	1941	2090	2239	2388	2538	2687
3000	717	896	1075	1254	1433	1612	1791	1970	2150	2329	2508	2687	2866	3045	3224
3500	836	1045	1254	1463	1672	1881	2090	2299	2508	2717	2926	3135	3344	3553	3762
4000	955	1194	1433	1672	1911	2150	2388	2627	2866	3105	3344	3583	3821	4060	4299
4500	1075	1343	1612	1881	2150	2418	2687	2956	3224	3493	3762	4030	4299	4568	4837
5000	1194	1493	1791	2090	2388	2687	2986	3284	3583	3881	4180	4478	4777	5075	5374

Gear Box...Med. Gear **RATE CHART KG. PER HA.**

Material Density Cu. M 0.80 Figures in body of chart = mm of door opening

Width.	8	10	12	14	16	18	20	22	24	26	28	30	32	34	36
Rate	-	-	-	-	-	-	-	-	-	-	-	-	-	-	-------
400	90	112	134	157	179	202	224	246	269	291	313	336	358	381	403
425	95	119	143	167	190	214	238	262	285	309	333	357	381	404	428
450	101	126	151	176	202	227	252	277	302	327	353	378	403	428	453
475	106	133	160	186	213	239	266	292	319	346	372	399	425	452	479
500	112	140	168	196	224	252	280	308	336	364	392	420	448	476	504
525	118	147	176	206	235	264	294	323	353	382	411	441	470	500	529
550	123	154	185	216	246	277	308	339	369	400	431	462	493	523	554
575	129	161	193	225	257	290	322	354	386	418	451	483	515	547	579
600	134	168	202	235	269	302	336	369	403	437	470	504	537	571	605
625	140	175	210	245	280	315	350	385	420	455	490	525	560	595	630
650	146	182	218	255	291	327	364	400	437	473	509	546	582	619	655
675	151	189	227	264	302	340	378	416	453	491	529	567	605	642	680
700	157	196	235	274	313	353	392	431	470	509	549	588	627	666	705
750	168	210	252	294	336	378	420	462	504	546	588	630	672	714	756
800	179	224	269	313	358	403	448	493	537	582	627	672	717	761	806
850	190	238	285	333	381	428	476	523	571	619	666	714	761	809	856
900	202	252	302	353	403	453	504	554	605	655	705	756	806	856	907
950	213	266	319	372	425	479	532	585	638	691	745	798	851	904	957
1000	224	280	336	392	448	504	560	616	672	728	784	840	896	952	1008
1050	235	294	353	411	470	529	588	647	705	764	823	882	940	999	1058
1100	246	308	369	431	493	554	616	677	739	800	862	924	985	1047	1108
1150	257	322	386	451	515	579	644	708	772	837	901	966	1030	1094	1159
1200	269	336	403	470	537	605	672	739	806	873	940	1008	1075	1142	1209
1250	280	350	420	490	560	630	700	770	840	910	980	1050	1120	1190	1260
1300	291	364	437	509	582	655	728	800	873	946	1019	1092	1164	1237	1310
1350	302	378	453	529	605	680	756	831	907	982	1058	1134	1209	1285	1360
1400	313	392	470	549	627	705	784	862	940	1019	1097	1176	1254	1332	1411
1450	325	406	487	568	649	731	812	893	974	1055	1136	1218	1299	1380	1461
1500	336	420	504	588	672	756	840	924	1008	1092	1176	1260	1343	1427	1511
1550	347	434	521	607	694	781	868	954	1041	1128	1215	1301	1388	1475	1562
1600	358	448	537	627	717	806	896	985	1075	1164	1254	1343	1433	1523	1612
1650	369	462	554	647	739	831	924	1016	1108	1201	1293	1385	1478	1570	1663
1700	381	476	571	666	761	856	952	1047	1142	1237	1332	1427	1523	1618	1713
1800	403	504	605	705	806	907	1008	1108	1209	1310	1411	1511	1612	1713	1814
1900	425	532	638	745	851	957	1064	1170	1276	1383	1489	1595	1702	1808	1914
2000	448	560	672	784	896	1008	1120	1232	1343	1455	1567	1679	1791	1903	2015
2500	560	700	840	980	1120	1260	1399	1539	1679	1819	1959	2099	2239	2379	2519
3000	672	840	1008	1176	1343	1511	1679	1847	2015	2183	2351	2519	2687	2855	3023
3500	784	980	1176	1371	1567	1763	1959	2155	2351	2547	2743	2939	3135	3331	3527
4000	896	1120	1343	1567	1791	2015	2239	2463	2687	2911	3135	3359	3583	3807	4030
4500	1008	1260	1511	1763	2015	2267	2519	2771	3023	3275	3527	3779	4030	4282	4534
5000	1120	1399	1679	1959	2239	2519	2799	3079	3359	3639	3918	4198	4478	4758	5038

Gear Box...Med. Gear **RATE CHART KG. PER HA.**

Material Density Cu. M 0.85 Figures in body of chart = mm of door opening

Width.	8	10	12	14	16	18	20	22	24	26	28	30	32	34	36
Rate	-	-	-	-	-	-	-	-	-	-	-	-	-	-	-------
400	84	105	126	148	169	190	211	232	253	274	295	316	337	358	379
425	90	112	134	157	179	202	224	246	269	291	313	336	358	381	403
450	95	119	142	166	190	213	237	261	285	308	332	356	379	403	427
475	100	125	150	175	200	225	250	275	300	325	350	375	400	425	450
500	105	132	158	184	211	237	263	290	316	342	369	395	421	448	474
525	111	138	166	194	221	249	277	304	332	360	387	415	443	470	498
550	116	145	174	203	232	261	290	319	348	377	406	435	464	493	522
575	121	151	182	212	242	273	303	333	364	394	424	454	485	515	545
600	126	158	190	221	253	285	316	348	379	411	443	474	506	537	569
625	132	165	198	230	263	296	329	362	395	428	461	494	527	560	593
650	137	171	205	240	274	308	342	377	411	445	479	514	548	582	616
675	142	178	213	249	285	320	356	391	427	462	498	533	569	605	640
700	148	184	221	258	295	332	369	406	443	479	516	553	590	627	664
750	158	198	237	277	316	356	395	435	474	514	553	593	632	672	711
800	169	211	253	295	337	379	421	464	506	548	590	632	674	717	759
850	179	224	269	313	358	403	448	493	537	582	627	672	717	761	806
900	190	237	285	332	379	427	474	522	569	616	664	711	759	806	854
950	200	250	300	350	400	450	501	551	601	651	701	751	801	851	901
1000	211	263	316	369	421	474	527	580	632	685	738	790	843	896	948
1050	221	277	332	387	443	498	553	609	664	719	774	830	885	940	996
1100	232	290	348	406	464	522	580	637	695	753	811	869	927	985	1043
1150	242	303	364	424	485	545	606	666	727	788	848	909	969	1030	1091
1200	253	316	379	443	506	569	632	695	759	822	885	948	1012	1075	1138
1250	263	329	395	461	527	593	659	724	790	856	922	988	1054	1120	1185
1300	274	342	411	479	548	616	685	753	822	890	959	1027	1096	1164	1233
1350	285	356	427	498	569	640	711	782	854	925	996	1067	1138	1209	1280
1400	295	369	443	516	590	664	738	811	885	959	1033	1106	1180	1254	1328
1450	306	382	458	535	611	688	764	840	917	993	1070	1146	1222	1299	1375
1500	316	395	474	553	632	711	790	869	948	1027	1106	1185	1264	1343	1423
1550	327	408	490	572	653	735	817	898	980	1062	1143	1225	1307	1388	1470
1600	337	421	506	590	674	759	843	927	1012	1096	1180	1264	1349	1433	1517
1650	348	435	522	609	695	782	869	956	1043	1130	1217	1304	1391	1478	1565
1700	358	448	537	627	717	806	896	985	1075	1164	1254	1343	1433	1523	1612
1800	379	474	569	664	759	854	948	1043	1138	1233	1328	1423	1517	1612	1707
1900	400	501	601	701	801	901	1001	1101	1201	1301	1401	1502	1602	1702	1802
2000	421	527	632	738	843	948	1054	1159	1264	1370	1475	1581	1686	1791	1897
2500	527	659	790	922	1054	1185	1317	1449	1581	1712	1844	1976	2107	2239	2371
3000	632	790	948	1106	1264	1423	1581	1739	1897	2055	2213	2371	2529	2687	2845
3500	738	922	1106	1291	1475	1660	1844	2028	2213	2397	2582	2766	2950	3135	3319
4000	843	1054	1264	1475	1686	1897	2107	2318	2529	2740	2950	3161	3372	3583	3793
4500	948	1185	1423	1660	1897	2134	2371	2608	2845	3082	3319	3556	3793	4030	4268
5000	1054	1317	1581	1844	2107	2371	2634	2898	3161	3425	3688	3951	4215	4478	4742

Gear Box...Med. Gear **RATE CHART KG. PER HA.**

Material Density Cu. M 0.90 Figures in body of chart = mm of door opening

Width.	8	10	12	14	16	18	20	22	24	26	28	30	32	34	36
Rate	-	-	-	-	-	-	-	-	-	-	-	-	-	-	-------
400	80	100	119	139	159	179	199	219	239	259	279	299	318	338	358
425	85	106	127	148	169	190	211	233	254	275	296	317	338	360	381
450	90	112	134	157	179	202	224	246	269	291	313	336	358	381	403
475	95	118	142	165	189	213	236	260	284	307	331	355	378	402	425
500	100	124	149	174	199	224	249	274	299	323	348	373	398	423	448
525	104	131	157	183	209	235	261	287	313	340	366	392	418	444	470
550	109	137	164	192	219	246	274	301	328	356	383	411	438	465	493
575	114	143	172	200	229	257	286	315	343	372	401	429	458	486	515
600	119	149	179	209	239	269	299	328	358	388	418	448	478	508	537
625	124	155	187	218	249	280	311	342	373	404	435	466	498	529	560
650	129	162	194	226	259	291	323	356	388	420	453	485	517	550	582
675	134	168	202	235	269	302	336	369	403	437	470	504	537	571	605
700	139	174	209	244	279	313	348	383	418	453	488	522	557	592	627
750	149	187	224	261	299	336	373	411	448	485	522	560	597	634	672
800	159	199	239	279	318	358	398	438	478	517	557	597	637	677	717
850	169	211	254	296	338	381	423	465	508	550	592	634	677	719	761
900	179	224	269	313	358	403	448	493	537	582	627	672	717	761	806
950	189	236	284	331	378	425	473	520	567	615	662	709	756	804	851
1000	199	249	299	348	398	448	498	547	597	647	697	746	796	846	896
1050	209	261	313	366	418	470	522	575	627	679	731	784	836	888	940
1100	219	274	328	383	438	493	547	602	657	712	766	821	876	930	985
1150	229	286	343	401	458	515	572	629	687	744	801	858	916	973	1030
1200	239	299	358	418	478	537	597	657	717	776	836	896	955	1015	1075
1250	249	311	373	435	498	560	622	684	746	809	871	933	995	1057	1120
1300	259	323	388	453	517	582	647	712	776	841	906	970	1035	1100	1164
1350	269	336	403	470	537	605	672	739	806	873	940	1008	1075	1142	1209
1400	279	348	418	488	557	627	697	766	836	906	975	1045	1115	1184	1254
1450	289	361	433	505	577	649	721	794	866	938	1010	1082	1154	1227	1299
1500	299	373	448	522	597	672	746	821	896	970	1045	1120	1194	1269	1343
1550	309	386	463	540	617	694	771	848	926	1003	1080	1157	1234	1311	1388
1600	318	398	478	557	637	717	796	876	955	1035	1115	1194	1274	1353	1433
1650	328	411	493	575	657	739	821	903	985	1067	1149	1232	1314	1396	1478
1700	338	423	508	592	677	761	846	930	1015	1100	1184	1269	1353	1438	1523
1800	358	448	537	627	717	806	896	985	1075	1164	1254	1343	1433	1523	1612
1900	378	473	567	662	756	851	945	1040	1134	1229	1324	1418	1513	1607	1702
2000	398	498	597	697	796	896	995	1095	1194	1294	1393	1493	1592	1692	1791
2500	498	622	746	871	995	1120	1244	1368	1493	1617	1742	1866	1990	2115	2239
3000	597	746	896	1045	1194	1343	1493	1642	1791	1941	2090	2239	2388	2538	2687
3500	697	871	1045	1219	1393	1567	1742	1916	2090	2264	2438	2612	2786	2961	3135
4000	796	995	1194	1393	1592	1791	1990	2189	2388	2587	2786	2986	3185	3384	3583
4500	896	1120	1343	1567	1791	2015	2239	2463	2687	2911	3135	3359	3583	3807	4030
5000	995	1244	1493	1742	1990	2239	2488	2737	2986	3234	3483	3732	3981	4229	4478

Gear Box...Med. Gear **RATE CHART KG. PER HA.**

Material Density Cu. M 0.95 Figures in body of chart = mm of door opening

Width.	8	10	12	14	16	18	20	22	24	26	28	30	32	34	36
Rate	-	-	-	-	-	-	-	-	-	-	-	-	-	-	-------
400	75	94	113	132	151	170	189	207	226	245	264	283	302	321	339
425	80	100	120	140	160	180	200	220	240	260	280	301	321	341	361
450	85	106	127	148	170	191	212	233	255	276	297	318	339	361	382
475	90	112	134	157	179	202	224	246	269	291	313	336	358	381	403
500	94	118	141	165	189	212	236	259	283	306	330	354	377	401	424
525	99	124	148	173	198	223	247	272	297	322	346	371	396	421	445
550	104	130	156	181	207	233	259	285	311	337	363	389	415	441	467
575	108	136	163	190	217	244	271	298	325	352	379	407	434	461	488
600	113	141	170	198	226	255	283	311	339	368	396	424	453	481	509
625	118	147	177	206	236	265	295	324	354	383	412	442	471	501	530
650	123	153	184	214	245	276	306	337	368	398	429	460	490	521	552
675	127	159	191	223	255	286	318	350	382	414	445	477	509	541	573
700	132	165	198	231	264	297	330	363	396	429	462	495	528	561	594
750	141	177	212	247	283	318	354	389	424	460	495	530	566	601	636
800	151	189	226	264	302	339	377	415	453	490	528	566	603	641	679
850	160	200	240	280	321	361	401	441	481	521	561	601	641	681	721
900	170	212	255	297	339	382	424	467	509	552	594	636	679	721	764
950	179	224	269	313	358	403	448	493	537	582	627	672	717	761	806
1000	189	236	283	330	377	424	471	519	566	613	660	707	754	801	849
1050	198	247	297	346	396	445	495	544	594	643	693	742	792	841	891
1100	207	259	311	363	415	467	519	570	622	674	726	778	830	882	933
1150	217	271	325	379	434	488	542	596	651	705	759	813	867	922	976
1200	226	283	339	396	453	509	566	622	679	735	792	849	905	962	1018
1250	236	295	354	412	471	530	589	648	707	766	825	884	943	1002	1061
1300	245	306	368	429	490	552	613	674	735	797	858	919	981	1042	1103
1350	255	318	382	445	509	573	636	700	764	827	891	955	1018	1082	1145
1400	264	330	396	462	528	594	660	726	792	858	924	990	1056	1122	1188
1450	273	342	410	478	547	615	684	752	820	889	957	1025	1094	1162	1230
1500	283	354	424	495	566	636	707	778	849	919	990	1061	1131	1202	1273
1550	292	365	438	511	585	658	731	804	877	950	1023	1096	1169	1242	1315
1600	302	377	453	528	603	679	754	830	905	981	1056	1131	1207	1282	1358
1650	311	389	467	544	622	700	778	856	933	1011	1089	1167	1244	1322	1400
1700	321	401	481	561	641	721	801	882	962	1042	1122	1202	1282	1362	1442
1800	339	424	509	594	679	764	849	933	1018	1103	1188	1273	1358	1442	1527
1900	358	448	537	627	717	806	896	985	1075	1164	1254	1343	1433	1523	1612
2000	377	471	566	660	754	849	943	1037	1131	1226	1320	1414	1508	1603	1697
2500	471	589	707	825	943	1061	1178	1296	1414	1532	1650	1768	1886	2003	2121
3000	566	707	849	990	1131	1273	1414	1556	1697	1838	1980	2121	2263	2404	2546
3500	660	825	990	1155	1320	1485	1650	1815	1980	2145	2310	2475	2640	2805	2970
4000	754	943	1131	1320	1508	1697	1886	2074	2263	2451	2640	2828	3017	3205	3394
4500	849	1061	1273	1485	1697	1909	2121	2333	2546	2758	2970	3182	3394	3606	3818
5000	943	1178	1414	1650	1886	2121	2357	2593	2828	3064	3300	3535	3771	4007	4243

Gear Box...Med. Gear **RATE CHART KG. PER HA.**

Material Density Cu. M 1.00 Figures in body of chart = mm of door opening

Width.	8	10	12	14	16	18	20	22	24	26	28	30	32	34	36
Rate	-	-	-	-	-	-	-	-	-	-	-	-	-	-	-------
400	72	90	107	125	143	161	179	197	215	233	251	269	287	305	322
425	76	95	114	133	152	171	190	209	228	247	266	285	305	324	343
450	81	101	121	141	161	181	202	222	242	262	282	302	322	343	363
475	85	106	128	149	170	191	213	234	255	277	298	319	340	362	383
500	90	112	134	157	179	202	224	246	269	291	313	336	358	381	403
525	94	118	141	165	188	212	235	259	282	306	329	353	376	400	423
550	99	123	148	172	197	222	246	271	296	320	345	369	394	419	443
575	103	129	154	180	206	232	257	283	309	335	360	386	412	438	463
600	107	134	161	188	215	242	269	296	322	349	376	403	430	457	484
625	112	140	168	196	224	252	280	308	336	364	392	420	448	476	504
650	116	146	175	204	233	262	291	320	349	378	408	437	466	495	524
675	121	151	181	212	242	272	302	333	363	393	423	453	484	514	544
700	125	157	188	219	251	282	313	345	376	408	439	470	502	533	564
750	134	168	202	235	269	302	336	369	403	437	470	504	537	571	605
800	143	179	215	251	287	322	358	394	430	466	502	537	573	609	645
850	152	190	228	266	305	343	381	419	457	495	533	571	609	647	685
900	161	202	242	282	322	363	403	443	484	524	564	605	645	685	725
950	170	213	255	298	340	383	425	468	511	553	596	638	681	723	766
1000	179	224	269	313	358	403	448	493	537	582	627	672	717	761	806
1050	188	235	282	329	376	423	470	517	564	611	658	705	752	799	846
1100	197	246	296	345	394	443	493	542	591	640	690	739	788	837	887
1150	206	257	309	360	412	463	515	566	618	669	721	772	824	875	927
1200	215	269	322	376	430	484	537	591	645	699	752	806	860	914	967
1250	224	280	336	392	448	504	560	616	672	728	784	840	896	952	1008
1300	233	291	349	408	466	524	582	640	699	757	815	873	931	990	1048
1350	242	302	363	423	484	544	605	665	725	786	846	907	967	1028	1088
1400	251	313	376	439	502	564	627	690	752	815	878	940	1003	1066	1129
1450	260	325	390	455	519	584	649	714	779	844	909	974	1039	1104	1169
1500	269	336	403	470	537	605	672	739	806	873	940	1008	1075	1142	1209
1550	278	347	416	486	555	625	694	764	833	902	972	1041	1111	1180	1249
1600	287	358	430	502	573	645	717	788	860	931	1003	1075	1146	1218	1290
1650	296	369	443	517	591	665	739	813	887	961	1034	1108	1182	1256	1330
1700	305	381	457	533	609	685	761	837	914	990	1066	1142	1218	1294	1370
1800	322	403	484	564	645	725	806	887	967	1048	1129	1209	1290	1370	1451
1900	340	425	511	596	681	766	851	936	1021	1106	1191	1276	1361	1446	1532
2000	358	448	537	627	717	806	896	985	1075	1164	1254	1343	1433	1523	1612
2500	448	560	672	784	896	1008	1120	1232	1343	1455	1567	1679	1791	1903	2015
3000	537	672	806	940	1075	1209	1343	1478	1612	1747	1881	2015	2150	2284	2418
3500	627	784	940	1097	1254	1411	1567	1724	1881	2038	2194	2351	2508	2665	2821
4000	717	896	1075	1254	1433	1612	1791	1970	2150	2329	2508	2687	2866	3045	3224
4500	806	1008	1209	1411	1612	1814	2015	2217	2418	2620	2821	3023	3224	3426	3627
5000	896	1120	1343	1567	1791	2015	2239	2463	2687	2911	3135	3359	3583	3807	4030

Gear Box...Med. Gear **RATE CHART KG. PER HA.**

Material Density Cu. M 1.05 Figures in body of chart = mm of door opening

Width.	8	10	12	14	16	18	20	22	24	26	28	30	32	34	36
Rate	-	-	-	-	-	-	-	-	-	-	-	-	-	-	-------
400	68	85	102	119	136	154	171	188	205	222	239	256	273	290	307
425	73	91	109	127	145	163	181	199	218	236	254	272	290	308	326
450	77	96	115	134	154	173	192	211	230	250	269	288	307	326	345
475	81	101	122	142	162	182	203	223	243	263	284	304	324	344	365
500	85	107	128	149	171	192	213	235	256	277	299	320	341	363	384
525	90	112	134	157	179	202	224	246	269	291	313	336	358	381	403
550	94	117	141	164	188	211	235	258	281	305	328	352	375	399	422
575	98	123	147	172	196	221	245	270	294	319	343	368	392	417	441
600	102	128	154	179	205	230	256	281	307	333	358	384	409	435	461
625	107	133	160	187	213	240	267	293	320	347	373	400	427	453	480
650	111	139	166	194	222	250	277	305	333	360	388	416	444	471	499
675	115	144	173	202	230	259	288	317	345	374	403	432	461	489	518
700	119	149	179	209	239	269	299	328	358	388	418	448	478	508	537
750	128	160	192	224	256	288	320	352	384	416	448	480	512	544	576
800	136	171	205	239	273	307	341	375	409	444	478	512	546	580	614
850	145	181	218	254	290	326	363	399	435	471	508	544	580	616	653
900	154	192	230	269	307	345	384	422	461	499	537	576	614	653	691
950	162	203	243	284	324	365	405	446	486	527	567	608	648	689	729
1000	171	213	256	299	341	384	427	469	512	554	597	640	682	725	768
1050	179	224	269	313	358	403	448	493	537	582	627	672	717	761	806
1100	188	235	281	328	375	422	469	516	563	610	657	704	751	798	844
1150	196	245	294	343	392	441	490	540	589	638	687	736	785	834	883
1200	205	256	307	358	409	461	512	563	614	665	717	768	819	870	921
1250	213	267	320	373	427	480	533	586	640	693	746	800	853	906	960
1300	222	277	333	388	444	499	554	610	665	721	776	832	887	943	998
1350	230	288	345	403	461	518	576	633	691	749	806	864	921	979	1036
1400	239	299	358	418	478	537	597	657	717	776	836	896	955	1015	1075
1450	247	309	371	433	495	557	618	680	742	804	866	928	989	1051	1113
1500	256	320	384	448	512	576	640	704	768	832	896	960	1024	1088	1152
1550	264	331	397	463	529	595	661	727	793	859	926	992	1058	1124	1190
1600	273	341	409	478	546	614	682	751	819	887	955	1024	1092	1160	1228
1650	281	352	422	493	563	633	704	774	844	915	985	1056	1126	1196	1267
1700	290	363	435	508	580	653	725	798	870	943	1015	1088	1160	1233	1305
1800	307	384	461	537	614	691	768	844	921	998	1075	1152	1228	1305	1382
1900	324	405	486	567	648	729	810	891	972	1053	1134	1216	1297	1378	1459
2000	341	427	512	597	682	768	853	938	1024	1109	1194	1280	1365	1450	1535
2500	427	533	640	746	853	960	1066	1173	1280	1386	1493	1599	1706	1813	1919
3000	512	640	768	896	1024	1152	1280	1407	1535	1663	1791	1919	2047	2175	2303
3500	597	746	896	1045	1194	1343	1493	1642	1791	1941	2090	2239	2388	2538	2687
4000	682	853	1024	1194	1365	1535	1706	1877	2047	2218	2388	2559	2730	2900	3071
4500	768	960	1152	1343	1535	1727	1919	2111	2303	2495	2687	2879	3071	3263	3455
5000	853	1066	1280	1493	1706	1919	2133	2346	2559	2772	2986	3199	3412	3625	3839

Gear Box...Med. Gear **RATE CHART KG. PER HA.**

Material Density Cu. M 1.10 Figures in body of chart = mm of door opening

Width.	8	10	12	14	16	18	20	22	24	26	28	30	32	34	36
Rate	-	-	-	-	-	-	-	-	-	-	-	-	-	-	-------
400	43	54	65	76	86	97	108	119	130	140	151	162	173	184	194
425	46	57	69	80	92	103	115	126	138	149	161	172	184	195	207
450	49	61	73	85	97	109	122	134	146	158	170	182	194	207	219
475	51	64	77	90	103	115	128	141	154	167	180	192	205	218	231
500	54	68	81	95	108	122	135	149	162	176	189	202	216	230	243
525	57	71	85	99	113	128	142	156	170	184	198	213	227	241	255
550	59	74	89	104	119	134	149	163	178	193	208	223	238	252	267
575	62	78	93	109	124	140	155	171	186	202	217	233	248	264	279
600	65	81	97	113	130	146	162	178	194	211	227	243	259	275	292
625	68	84	101	118	135	152	169	186	203	219	236	253	270	287	304
650	70	88	105	123	140	158	176	193	211	228	246	263	281	298	316
675	73	91	109	128	146	164	182	200	219	237	255	273	292	310	328
700	76	95	113	132	151	170	189	208	227	246	265	284	302	321	340
750	81	101	122	142	162	182	203	223	243	263	284	304	324	344	365
800	86	108	130	151	173	194	216	238	259	281	302	324	346	367	389
850	92	115	138	161	184	207	230	252	275	298	321	344	367	390	413
900	97	122	146	170	194	219	243	267	292	316	340	365	389	413	437
950	103	128	154	180	205	231	257	282	308	333	359	385	410	436	462
1000	108	135	162	189	216	243	270	297	324	351	378	405	432	459	486
1050	113	142	170	198	227	255	284	312	340	369	397	425	454	482	510
1100	119	149	178	208	238	267	297	327	356	386	416	445	475	505	535
1150	124	155	186	217	248	279	311	342	373	404	435	466	497	528	559
1200	130	162	194	227	259	292	324	356	389	421	454	486	518	551	583
1250	135	169	203	236	270	304	338	371	405	439	473	506	540	574	608
1300	140	176	211	246	281	316	351	386	421	456	491	527	562	597	632
1350	146	182	219	255	292	328	365	401	437	474	510	547	583	620	656
1400	151	189	227	265	302	340	378	416	454	491	529	567	605	643	680
1450	157	196	235	274	313	352	392	431	470	509	548	587	626	666	705
1500	162	203	243	284	324	365	405	446	486	527	567	608	648	689	729
1550	167	209	251	293	335	377	419	460	502	544	586	628	670	711	753
1600	173	216	259	302	346	389	432	475	518	562	605	648	691	734	778
1650	178	223	267	312	356	401	446	490	535	579	624	668	713	757	802
1700	184	230	275	321	367	413	459	505	551	597	643	689	734	780	826
1800	194	243	292	340	389	437	486	535	583	632	680	729	778	826	875
1900	205	257	308	359	410	462	513	564	616	667	718	770	821	872	923
2000	216	270	324	378	432	486	540	594	648	702	756	810	864	918	972
2500	270	338	405	473	540	608	675	743	810	878	945	1012	1080	1148	1215
3000	324	405	486	567	648	729	810	891	972	1053	1134	1215	1296	1377	1458
3500	378	473	567	662	756	851	945	1040	1134	1229	1323	1418	1512	1607	1701
4000	432	540	648	756	864	972	1080	1188	1296	1404	1512	1620	1728	1836	1944
4500	486	608	729	851	972	1094	1215	1337	1458	1580	1701	1822	1944	2066	2187
5000	540	675	810	945	1080	1215	1350	1485	1620	1755	1890	2025	2160	2295	2430

Gear Box...Med. Gear **RATE CHART KG. PER HA.**

Material Density Cu. M 1.15 Figures in body of chart = mm of door opening

Width.	8	10	12	14	16	18	20	22	24	26	28	30	32	34	36
Rate	-	-	-	-	-	-	-	-	-	-	-	-	-	-	-------
400	62	78	93	109	125	140	156	171	187	202	218	234	249	265	280
425	66	83	99	116	132	149	166	182	199	215	232	248	265	281	298
450	70	88	105	123	140	158	175	193	210	228	245	263	280	298	315
475	74	92	111	129	148	166	185	203	222	240	259	277	296	314	333
500	78	97	117	136	156	175	195	214	234	253	273	292	312	331	350
525	82	102	123	143	164	184	204	225	245	266	286	307	327	348	368
550	86	107	129	150	171	193	214	236	257	278	300	321	343	364	386
575	90	112	134	157	179	202	224	246	269	291	313	336	358	381	403
600	93	117	140	164	187	210	234	257	280	304	327	350	374	397	421
625	97	122	146	170	195	219	243	268	292	316	341	365	389	414	438
650	101	127	152	177	202	228	253	278	304	329	354	380	405	430	456
675	105	131	158	184	210	237	263	289	315	342	368	394	421	447	473
700	109	136	164	191	218	245	273	300	327	354	382	409	436	463	491
750	117	146	175	204	234	263	292	321	350	380	409	438	467	497	526
800	125	156	187	218	249	280	312	343	374	405	436	467	498	530	561
850	132	166	199	232	265	298	331	364	397	430	463	497	530	563	596
900	140	175	210	245	280	315	350	386	421	456	491	526	561	596	631
950	148	185	222	259	296	333	370	407	444	481	518	555	592	629	666
1000	156	195	234	273	312	350	389	428	467	506	545	584	623	662	701
1050	164	204	245	286	327	368	409	450	491	532	572	613	654	695	736
1100	171	214	257	300	343	386	428	471	514	557	600	643	685	728	771
1150	179	224	269	313	358	403	448	493	537	582	627	672	717	761	806
1200	187	234	280	327	374	421	467	514	561	607	654	701	748	794	841
1250	195	243	292	341	389	438	487	535	584	633	681	730	779	828	876
1300	202	253	304	354	405	456	506	557	607	658	709	759	810	861	911
1350	210	263	315	368	421	473	526	578	631	683	736	789	841	894	946
1400	218	273	327	382	436	491	545	600	654	709	763	818	872	927	981
1450	226	282	339	395	452	508	565	621	678	734	791	847	903	960	1016
1500	234	292	350	409	467	526	584	643	701	759	818	876	935	993	1051
1550	241	302	362	423	483	543	604	664	724	785	845	905	966	1026	1086
1600	249	312	374	436	498	561	623	685	748	810	872	935	997	1059	1122
1650	257	321	386	450	514	578	643	707	771	835	900	964	1028	1092	1157
1700	265	331	397	463	530	596	662	728	794	861	927	993	1059	1125	1192
1800	280	350	421	491	561	631	701	771	841	911	981	1051	1122	1192	1262
1900	296	370	444	518	592	666	740	814	888	962	1036	1110	1184	1258	1332
2000	312	389	467	545	623	701	779	857	935	1012	1090	1168	1246	1324	1402
2500	389	487	584	681	779	876	974	1071	1168	1266	1363	1460	1558	1655	1752
3000	467	584	701	818	935	1051	1168	1285	1402	1519	1636	1752	1869	1986	2103
3500	545	681	818	954	1090	1227	1363	1499	1636	1772	1908	2044	2181	2317	2453
4000	623	779	935	1090	1246	1402	1558	1713	1869	2025	2181	2336	2492	2648	2804
4500	701	876	1051	1227	1402	1577	1752	1928	2103	2278	2453	2629	2804	2979	3154
5000	779	974	1168	1363	1558	1752	1947	2142	2336	2531	2726	2921	3115	3310	3505

Gear Box...Med. Gear **RATE CHART KG. PER HA.**

Material Density Cu. M 1.20 Figures in body of chart = mm of door opening

Width.	8	10	12	14	16	18	20	22	24	26	28	30	32	34	36
Rate	-	-	-	-	-	-	-	-	-	-	-	-	-	-	-------
400	60	75	90	104	119	134	149	164	179	194	209	224	239	254	269
425	63	79	95	111	127	143	159	174	190	206	222	238	254	270	285
450	67	84	101	118	134	151	168	185	202	218	235	252	269	285	302
475	71	89	106	124	142	160	177	195	213	230	248	266	284	301	319
500	75	93	112	131	149	168	187	205	224	243	261	280	299	317	336
525	78	98	118	137	157	176	196	216	235	255	274	294	313	333	353
550	82	103	123	144	164	185	205	226	246	267	287	308	328	349	369
575	86	107	129	150	172	193	215	236	257	279	300	322	343	365	386
600	90	112	134	157	179	202	224	246	269	291	313	336	358	381	403
625	93	117	140	163	187	210	233	257	280	303	327	350	373	397	420
650	97	121	146	170	194	218	243	267	291	315	340	364	388	412	437
675	101	126	151	176	202	227	252	277	302	327	353	378	403	428	453
700	104	131	157	183	209	235	261	287	313	340	366	392	418	444	470
750	112	140	168	196	224	252	280	308	336	364	392	420	448	476	504
800	119	149	179	209	239	269	299	328	358	388	418	448	478	508	537
850	127	159	190	222	254	285	317	349	381	412	444	476	508	539	571
900	134	168	202	235	269	302	336	369	403	437	470	504	537	571	605
950	142	177	213	248	284	319	355	390	425	461	496	532	567	603	638
1000	149	187	224	261	299	336	373	411	448	485	522	560	597	634	672
1050	157	196	235	274	313	353	392	431	470	509	549	588	627	666	705
1100	164	205	246	287	328	369	411	452	493	534	575	616	657	698	739
1150	172	215	257	300	343	386	429	472	515	558	601	644	687	730	772
1200	179	224	269	313	358	403	448	493	537	582	627	672	717	761	806
1250	187	233	280	327	373	420	466	513	560	606	653	700	746	793	840
1300	194	243	291	340	388	437	485	534	582	631	679	728	776	825	873
1350	202	252	302	353	403	453	504	554	605	655	705	756	806	856	907
1400	209	261	313	366	418	470	522	575	627	679	731	784	836	888	940
1450	216	271	325	379	433	487	541	595	649	703	758	812	866	920	974
1500	224	280	336	392	448	504	560	616	672	728	784	840	896	952	1008
1550	231	289	347	405	463	521	578	636	694	752	810	868	926	983	1041
1600	239	299	358	418	478	537	597	657	717	776	836	896	955	1015	1075
1650	246	308	369	431	493	554	616	677	739	800	862	924	985	1047	1108
1700	254	317	381	444	508	571	634	698	761	825	888	952	1015	1079	1142
1800	269	336	403	470	537	605	672	739	806	873	940	1008	1075	1142	1209
1900	284	355	425	496	567	638	709	780	851	922	993	1064	1134	1205	1276
2000	299	373	448	522	597	672	746	821	896	970	1045	1120	1194	1269	1343
2500	373	466	560	653	746	840	933	1026	1120	1213	1306	1399	1493	1586	1679
3000	448	560	672	784	896	1008	1120	1232	1343	1455	1567	1679	1791	1903	2015
3500	522	653	784	914	1045	1176	1306	1437	1567	1698	1829	1959	2090	2220	2351
4000	597	746	896	1045	1194	1343	1493	1642	1791	1941	2090	2239	2388	2538	2687
4500	672	840	1008	1176	1343	1511	1679	1847	2015	2183	2351	2519	2687	2855	3023
5000	746	933	1120	1306	1493	1679	1866	2053	2239	2426	2612	2799	2986	3172	3359

Gear Box...Med. Gear **RATE CHART KG. PER HA.**

Material Density Cu. M 1.30 Figures in body of chart = mm of door opening

Width.	8	10	12	14	16	18	20	22	24	26	28	30	32	34	36
Rate	-	-	-	-	-	-	-	-	-	-	-	-	-	-	-------
400	55	69	83	96	110	124	138	152	165	179	193	207	220	234	248
425	59	73	88	102	117	132	146	161	176	190	205	220	234	249	264
450	62	78	93	109	124	140	155	171	186	202	217	233	248	264	279
475	65	82	98	115	131	147	164	180	196	213	229	245	262	278	295
500	69	86	103	121	138	155	172	189	207	224	241	258	276	293	310
525	72	90	109	127	145	163	181	199	217	235	253	271	289	307	326
550	76	95	114	133	152	171	189	208	227	246	265	284	303	322	341
575	79	99	119	139	158	178	198	218	238	257	277	297	317	337	357
600	83	103	124	145	165	186	207	227	248	269	289	310	331	351	372
625	86	108	129	151	172	194	215	237	258	280	301	323	344	366	388
650	90	112	134	157	179	202	224	246	269	291	313	336	358	381	403
675	93	116	140	163	186	209	233	256	279	302	326	349	372	395	419
700	96	121	145	169	193	217	241	265	289	313	338	362	386	410	434
750	103	129	155	181	207	233	258	284	310	336	362	388	413	439	465
800	110	138	165	193	220	248	276	303	331	358	386	413	441	468	496
850	117	146	176	205	234	264	293	322	351	381	410	439	468	498	527
900	124	155	186	217	248	279	310	341	372	403	434	465	496	527	558
950	131	164	196	229	262	295	327	360	393	425	458	491	524	556	589
1000	138	172	207	241	276	310	344	379	413	448	482	517	551	586	620
1050	145	181	217	253	289	326	362	398	434	470	506	543	579	615	651
1100	152	189	227	265	303	341	379	417	455	493	531	568	606	644	682
1150	158	198	238	277	317	357	396	436	475	515	555	594	634	673	713
1200	165	207	248	289	331	372	413	455	496	537	579	620	661	703	744
1250	172	215	258	301	344	388	431	474	517	560	603	646	689	732	775
1300	179	224	269	313	358	403	448	493	537	582	627	672	717	761	806
1350	186	233	279	326	372	419	465	512	558	605	651	698	744	791	837
1400	193	241	289	338	386	434	482	531	579	627	675	723	772	820	868
1450	200	250	300	350	400	450	499	549	599	649	699	749	799	849	899
1500	207	258	310	362	413	465	517	568	620	672	723	775	827	878	930
1550	214	267	320	374	427	481	534	587	641	694	748	801	854	908	961
1600	220	276	331	386	441	496	551	606	661	717	772	827	882	937	992
1650	227	284	341	398	455	512	568	625	682	739	796	853	909	966	1023
1700	234	293	351	410	468	527	586	644	703	761	820	878	937	996	1054
1800	248	310	372	434	496	558	620	682	744	806	868	930	992	1054	1116
1900	262	327	393	458	524	589	655	720	785	851	916	982	1047	1113	1178
2000	276	344	413	482	551	620	689	758	827	896	965	1033	1102	1171	1240
2500	344	431	517	603	689	775	861	947	1033	1120	1206	1292	1378	1464	1550
3000	413	517	620	723	827	930	1033	1137	1240	1343	1447	1550	1654	1757	1860
3500	482	603	723	844	965	1085	1206	1326	1447	1567	1688	1809	1929	2050	2170
4000	551	689	827	965	1102	1240	1378	1516	1654	1791	1929	2067	2205	2342	2480
4500	620	775	930	1085	1240	1395	1550	1705	1860	2015	2170	2325	2480	2635	2790
5000	689	861	1033	1206	1378	1550	1722	1895	2067	2239	2411	2584	2756	2928	3100

Gear Box...Med. Gear **RATE CHART KG. PER HA.**

Material Density Cu. M 1.40 Figures in body of chart = mm of door opening

Width.	8	10	12	14	16	18	20	22	24	26	28	30	32	34	36
Rate	-	-	-	-	-	-	-	-	-	-	-	-	-	-	-------
400	51	64	77	90	102	115	128	141	154	166	179	192	205	218	230
425	54	68	82	95	109	122	136	150	163	177	190	204	218	231	245
450	58	72	86	101	115	130	144	158	173	187	202	216	230	245	259
475	61	76	91	106	122	137	152	167	182	198	213	228	243	258	273
500	64	80	96	112	128	144	160	176	192	208	224	240	256	272	288
525	67	84	101	118	134	151	168	185	202	218	235	252	269	285	302
550	70	88	106	123	141	158	176	194	211	229	246	264	281	299	317
575	74	92	110	129	147	166	184	202	221	239	257	276	294	313	331
600	77	96	115	134	154	173	192	211	230	250	269	288	307	326	345
625	80	100	120	140	160	180	200	220	240	260	280	300	320	340	360
650	83	104	125	146	166	187	208	229	250	270	291	312	333	353	374
675	86	108	130	151	173	194	216	238	259	281	302	324	345	367	389
700	90	112	134	157	179	202	224	246	269	291	313	336	358	381	403
750	96	120	144	168	192	216	240	264	288	312	336	360	384	408	432
800	102	128	154	179	205	230	256	281	307	333	358	384	409	435	461
850	109	136	163	190	218	245	272	299	326	353	381	408	435	462	489
900	115	144	173	202	230	259	288	317	345	374	403	432	461	489	518
950	122	152	182	213	243	273	304	334	365	395	425	456	486	517	547
1000	128	160	192	224	256	288	320	352	384	416	448	480	512	544	576
1050	134	168	202	235	269	302	336	369	403	437	470	504	537	571	605
1100	141	176	211	246	281	317	352	387	422	457	493	528	563	598	633
1150	147	184	221	257	294	331	368	405	441	478	515	552	589	625	662
1200	154	192	230	269	307	345	384	422	461	499	537	576	614	653	691
1250	160	200	240	280	320	360	400	440	480	520	560	600	640	680	720
1300	166	208	250	291	333	374	416	457	499	541	582	624	665	707	749
1350	173	216	259	302	345	389	432	475	518	561	605	648	691	734	777
1400	179	224	269	313	358	403	448	493	537	582	627	672	717	761	806
1450	186	232	278	325	371	417	464	510	557	603	649	696	742	788	835
1500	192	240	288	336	384	432	480	528	576	624	672	720	768	816	864
1550	198	248	297	347	397	446	496	545	595	645	694	744	793	843	892
1600	205	256	307	358	409	461	512	563	614	665	717	768	819	870	921
1650	211	264	317	369	422	475	528	581	633	686	739	792	844	897	950
1700	218	272	326	381	435	489	544	598	653	707	761	816	870	924	979
1800	230	288	345	403	461	518	576	633	691	749	806	864	921	979	1036
1900	243	304	365	425	486	547	608	669	729	790	851	912	972	1033	1094
2000	256	320	384	448	512	576	640	704	768	832	896	960	1024	1088	1152
2500	320	400	480	560	640	720	800	880	960	1040	1120	1200	1280	1359	1439
3000	384	480	576	672	768	864	960	1056	1152	1248	1343	1439	1535	1631	1727
3500	448	560	672	784	896	1008	1120	1232	1343	1455	1567	1679	1791	1903	2015
4000	512	640	768	896	1024	1152	1280	1407	1535	1663	1791	1919	2047	2175	2303
4500	576	720	864	1008	1152	1295	1439	1583	1727	1871	2015	2159	2303	2447	2591
5000	640	800	960	1120	1280	1439	1599	1759	1919	2079	2239	2399	2559	2719	2879

Gear Box...Med. Gear **RATE CHART KG. PER HA.**

Material Density Cu. M 1.50 Figures in body of chart = mm of door opening

Width.	8	10	12	14	16	18	20	22	24	26	28	30	32	34	36
Rate	-	-	-	-	-	-	-	-	-	-	-	-	-	-	-------
400	48	60	72	84	96	107	119	131	143	155	167	179	191	203	215
425	51	63	76	89	102	114	127	140	152	165	178	190	203	216	228
450	54	67	81	94	107	121	134	148	161	175	188	202	215	228	242
475	57	71	85	99	113	128	142	156	170	184	199	213	227	241	255
500	60	75	90	104	119	134	149	164	179	194	209	224	239	254	269
525	63	78	94	110	125	141	157	172	188	204	219	235	251	266	282
550	66	82	99	115	131	148	164	181	197	213	230	246	263	279	296
575	69	86	103	120	137	154	172	189	206	223	240	257	275	292	309
600	72	90	107	125	143	161	179	197	215	233	251	269	287	305	322
625	75	93	112	131	149	168	187	205	224	243	261	280	299	317	336
650	78	97	116	136	155	175	194	213	233	252	272	291	310	330	349
675	81	101	121	141	161	181	202	222	242	262	282	302	322	343	363
700	84	104	125	146	167	188	209	230	251	272	293	313	334	355	376
750	90	112	134	157	179	202	224	246	269	291	313	336	358	381	403
800	96	119	143	167	191	215	239	263	287	310	334	358	382	406	430
850	102	127	152	178	203	228	254	279	305	330	355	381	406	431	457
900	107	134	161	188	215	242	269	296	322	349	376	403	430	457	484
950	113	142	170	199	227	255	284	312	340	369	397	425	454	482	511
1000	119	149	179	209	239	269	299	328	358	388	418	448	478	508	537
1050	125	157	188	219	251	282	313	345	376	408	439	470	502	533	564
1100	131	164	197	230	263	296	328	361	394	427	460	493	525	558	591
1150	137	172	206	240	275	309	343	378	412	446	481	515	549	584	618
1200	143	179	215	251	287	322	358	394	430	466	502	537	573	609	645
1250	149	187	224	261	299	336	373	411	448	485	522	560	597	634	672
1300	155	194	233	272	310	349	388	427	466	505	543	582	621	660	699
1350	161	202	242	282	322	363	403	443	484	524	564	605	645	685	725
1400	167	209	251	293	334	376	418	460	502	543	585	627	669	711	752
1450	173	216	260	303	346	390	433	476	519	563	606	649	693	736	779
1500	179	224	269	313	358	403	448	493	537	582	627	672	717	761	806
1550	185	231	278	324	370	416	463	509	555	602	648	694	740	787	833
1600	191	239	287	334	382	430	478	525	573	621	669	717	764	812	860
1650	197	246	296	345	394	443	493	542	591	640	690	739	788	837	887
1700	203	254	305	355	406	457	508	558	609	660	711	761	812	863	914
1800	215	269	322	376	430	484	537	591	645	699	752	806	860	914	967
1900	227	284	340	397	454	511	567	624	681	737	794	851	908	964	1021
2000	239	299	358	418	478	537	597	657	717	776	836	896	955	1015	1075
2500	299	373	448	522	597	672	746	821	896	970	1045	1120	1194	1269	1343
3000	358	448	537	627	717	806	896	985	1075	1164	1254	1343	1433	1523	1612
3500	418	522	627	731	836	940	1045	1149	1254	1358	1463	1567	1672	1776	1881
4000	478	597	717	836	955	1075	1194	1314	1433	1552	1672	1791	1911	2030	2150
4500	537	672	806	940	1075	1209	1343	1478	1612	1747	1881	2015	2150	2284	2418
5000	597	746	896	1045	1194	1343	1493	1642	1791	1941	2090	2239	2388	2538	2687

Gear Box...Med. Gear **RATE CHART KG. PER HA.**

Material Density Cu. M 1.60 Figures in body of chart = mm of door opening

Width.	8	10	12	14	16	18	20	22	24	26	28	30	32	34	36
Rate	-	-	-	-	-	-	-	-	-	-	-	-	-	-	-------
400	45	56	67	78	90	101	112	123	134	146	157	168	179	190	202
425	48	59	71	83	95	107	119	131	143	155	167	178	190	202	214
450	50	63	76	88	101	113	126	139	151	164	176	189	202	214	227
475	53	66	80	93	106	120	133	146	160	173	186	199	213	226	239
500	56	70	84	98	112	126	140	154	168	182	196	210	224	238	252
525	59	73	88	103	118	132	147	162	176	191	206	220	235	250	264
550	62	77	92	108	123	139	154	169	185	200	216	231	246	262	277
575	64	80	97	113	129	145	161	177	193	209	225	241	257	274	290
600	67	84	101	118	134	151	168	185	202	218	235	252	269	285	302
625	70	87	105	122	140	157	175	192	210	227	245	262	280	297	315
650	73	91	109	127	146	164	182	200	218	237	255	273	291	309	327
675	76	94	113	132	151	170	189	208	227	246	264	283	302	321	340
700	78	98	118	137	157	176	196	216	235	255	274	294	313	333	353
750	84	105	126	147	168	189	210	231	252	273	294	315	336	357	378
800	90	112	134	157	179	202	224	246	269	291	313	336	358	381	403
850	95	119	143	167	190	214	238	262	285	309	333	357	381	404	428
900	101	126	151	176	202	227	252	277	302	327	353	378	403	428	453
950	106	133	160	186	213	239	266	292	319	346	372	399	425	452	479
1000	112	140	168	196	224	252	280	308	336	364	392	420	448	476	504
1050	118	147	176	206	235	264	294	323	353	382	411	441	470	500	529
1100	123	154	185	216	246	277	308	339	369	400	431	462	493	523	554
1150	129	161	193	225	257	290	322	354	386	418	451	483	515	547	579
1200	134	168	202	235	269	302	336	369	403	437	470	504	537	571	605
1250	140	175	210	245	280	315	350	385	420	455	490	525	560	595	630
1300	146	182	218	255	291	327	364	400	437	473	509	546	582	619	655
1350	151	189	227	264	302	340	378	416	453	491	529	567	605	642	680
1400	157	196	235	274	313	353	392	431	470	509	549	588	627	666	705
1450	162	203	244	284	325	365	406	446	487	528	568	609	649	690	731
1500	168	210	252	294	336	378	420	462	504	546	588	630	672	714	756
1550	174	217	260	304	347	390	434	477	521	564	607	651	694	738	781
1600	179	224	269	313	358	403	448	493	537	582	627	672	717	761	806
1650	185	231	277	323	369	416	462	508	554	600	647	693	739	785	831
1700	190	238	285	333	381	428	476	523	571	619	666	714	761	809	856
1800	202	252	302	353	403	453	504	554	605	655	705	756	806	856	907
1900	213	266	319	372	425	479	532	585	638	691	745	798	851	904	957
2000	224	280	336	392	448	504	560	616	672	728	784	840	896	952	1008
2500	280	350	420	490	560	630	700	770	840	910	980	1050	1120	1190	1260
3000	336	420	504	588	672	756	840	924	1008	1092	1176	1260	1343	1427	1511
3500	392	490	588	686	784	882	980	1078	1176	1274	1371	1469	1567	1665	1763
4000	448	560	672	784	896	1008	1120	1232	1343	1455	1567	1679	1791	1903	2015
4500	504	630	756	882	1008	1134	1260	1385	1511	1637	1763	1889	2015	2141	2267
5000	560	700	840	980	1120	1260	1399	1539	1679	1819	1959	2099	2239	2379	2519

Gear Box...High Gear **RATE CHART KG. PER HA.**

Material Density Cu. M 0.75 Figures in body of chart = mm of door opening

Width.	8	10	12	14	16	18	20	22	24	26	28	30	32	34	36
Rate	-	-	-	-	-	-	-	-	-	-	-	-	-	-	-------
500	34	43	52	60	69	77	86	95	103	112	121	129	138	146	155
525	36	45	54	63	72	81	90	99	108	118	127	136	145	154	163
550	38	47	57	66	76	85	95	104	114	123	133	142	152	161	170
575	40	50	59	69	79	89	99	109	119	129	139	149	158	168	178
600	41	52	62	72	83	93	103	114	124	134	145	155	165	176	186
625	43	54	65	75	86	97	108	118	129	140	151	161	172	183	194
650	45	56	67	78	90	101	112	123	134	146	157	168	179	190	201
675	46	58	70	81	93	105	116	128	139	151	163	174	186	198	209
700	48	60	72	84	96	108	121	133	145	157	169	181	193	205	217
750	52	65	77	90	103	116	129	142	155	168	181	194	207	220	232
800	55	69	83	96	110	124	138	152	165	179	193	207	220	234	248
850	59	73	88	102	117	132	146	161	176	190	205	220	234	249	263
900	62	77	93	108	124	139	155	170	186	201	217	232	248	263	279
950	65	82	98	115	131	147	164	180	196	213	229	245	262	278	294
1000	69	86	103	121	138	155	172	189	207	224	241	258	276	293	310
1050	72	90	108	127	145	163	181	199	217	235	253	271	289	307	325
1100	76	95	114	133	152	170	189	208	227	246	265	284	303	322	341
1150	79	99	119	139	158	178	198	218	238	257	277	297	317	337	356
1200	83	103	124	145	165	186	207	227	248	269	289	310	331	351	372
1250	86	108	129	151	172	194	215	237	258	280	301	323	344	366	387
1300	90	112	134	157	179	201	224	246	269	291	313	336	358	381	403
1350	93	116	139	163	186	209	232	256	279	302	325	349	372	395	418
1400	96	121	145	169	193	217	241	265	289	313	338	362	386	410	434
1450	100	125	150	175	200	225	250	275	300	325	350	375	400	424	449
1500	103	129	155	181	207	232	258	284	310	336	362	387	413	439	465
1550	107	133	160	187	214	240	267	294	320	347	374	400	427	454	480
1600	110	138	165	193	220	248	276	303	331	358	386	413	441	468	496
1650	114	142	170	199	227	256	284	313	341	369	398	426	455	483	511
1700	117	146	176	205	234	263	293	322	351	381	410	439	468	498	527
1800	124	155	186	217	248	279	310	341	372	403	434	465	496	527	558
1900	131	164	196	229	262	294	327	360	393	425	458	491	523	556	589
2000	138	172	207	241	276	310	344	379	413	448	482	517	551	585	620
2500	172	215	258	301	344	387	431	474	517	560	603	646	689	732	775
3000	207	258	310	362	413	465	517	568	620	672	723	775	827	878	930
3500	241	301	362	422	482	542	603	663	723	784	844	904	964	1025	1085
4000	276	344	413	482	551	620	689	758	827	895	964	1033	1102	1171	1240
5000	344	431	517	603	689	775	861	947	1033	1119	1205	1292	1378	1464	1550
6000	413	517	620	723	827	930	1033	1137	1240	1343	1446	1550	1653	1756	1860
7000	482	603	723	844	964	1085	1205	1326	1446	1567	1688	1808	1929	2049	2170
8000	551	689	827	964	1102	1240	1378	1515	1653	1791	1929	2066	2204	2342	2480
9000	620	775	930	1085	1240	1395	1550	1705	1860	2015	2170	2325	2480	2635	2790
10000	689	861	1033	1205	1378	1550	1722	1894	2066	2239	2411	2583	2755	2927	3100

Gear Box...High Gear **RATE CHART KG. PER HA.**

Material Density Cu. M 0.80 Figures in body of chart = mm of door opening

Width.	8	10	12	14	16	18	20	22	24	26	28	30	32	34	36
Rate	-	-	-	-	-	-	-	-	-	-	-	-	-	-	-------
500	32	40	48	57	65	73	81	89	97	105	113	121	129	137	145
525	34	42	51	59	68	76	85	93	102	110	119	127	136	144	153
550	36	44	53	62	71	80	89	98	107	115	124	133	142	151	160
575	37	46	56	65	74	84	93	102	111	121	130	139	149	158	167
600	39	48	58	68	77	87	97	107	116	126	136	145	155	165	174
625	40	50	61	71	81	91	101	111	121	131	141	151	161	172	182
650	42	52	63	73	84	94	105	115	126	136	147	157	168	178	189
675	44	54	65	76	87	98	109	120	131	142	153	163	174	185	196
700	45	57	68	79	90	102	113	124	136	147	158	170	181	192	203
750	48	61	73	85	97	109	121	133	145	157	170	182	194	206	218
800	52	65	77	90	103	116	129	142	155	168	181	194	207	220	232
850	55	69	82	96	110	123	137	151	165	178	192	206	220	233	247
900	58	73	87	102	116	131	145	160	174	189	203	218	232	247	262
950	61	77	92	107	123	138	153	169	184	199	215	230	245	261	276
1000	65	81	97	113	129	145	161	178	194	210	226	242	258	274	291
1050	68	85	102	119	136	153	170	186	203	220	237	254	271	288	305
1100	71	89	107	124	142	160	178	195	213	231	249	266	284	302	320
1150	74	93	111	130	149	167	186	204	223	241	260	278	297	316	334
1200	77	97	116	136	155	174	194	213	232	252	271	291	310	329	349
1250	81	101	121	141	161	182	202	222	242	262	283	303	323	343	363
1300	84	105	126	147	168	189	210	231	252	273	294	315	336	357	378
1350	87	109	131	153	174	196	218	240	262	283	305	327	349	370	392
1400	90	113	136	158	181	203	226	249	271	294	316	339	362	384	407
1450	94	117	140	164	187	211	234	257	281	304	328	351	375	398	421
1500	97	121	145	170	194	218	242	266	291	315	339	363	387	412	436
1550	100	125	150	175	200	225	250	275	300	325	350	375	400	425	450
1600	103	129	155	181	207	232	258	284	310	336	362	387	413	439	465
1650	107	133	160	186	213	240	266	293	320	346	373	400	426	453	479
1700	110	137	165	192	220	247	274	302	329	357	384	412	439	467	494
1800	116	145	174	203	232	262	291	320	349	378	407	436	465	494	523
1900	123	153	184	215	245	276	307	337	368	399	429	460	491	521	552
2000	129	161	194	226	258	291	323	355	387	420	452	484	517	549	581
2500	161	202	242	283	323	363	404	444	484	525	565	605	646	686	726
3000	194	242	291	339	387	436	484	533	581	630	678	726	775	823	872
3500	226	283	339	396	452	509	565	622	678	735	791	848	904	961	1017
4000	258	323	387	452	517	581	646	710	775	839	904	969	1033	1098	1162
5000	323	404	484	565	646	726	807	888	969	1049	1130	1211	1291	1372	1453
6000	387	484	581	678	775	872	969	1065	1162	1259	1356	1453	1550	1647	1744
7000	452	565	678	791	904	1017	1130	1243	1356	1469	1582	1695	1808	1921	2034
8000	517	646	775	904	1033	1162	1291	1421	1550	1679	1808	1937	2066	2196	2325
9000	581	726	872	1017	1162	1308	1453	1598	1744	1889	2034	2179	2325	2470	2615
10000	646	807	969	1130	1291	1453	1614	1776	1937	2099	2260	2422	2583	2744	2906

Gear Box...High Gear **RATE CHART KG. PER HA.**

Material Density Cu. M 0.85 Figures in body of chart = mm of door opening

Width.	8	10	12	14	16	18	20	22	24	26	28	30	32	34	36
Rate	-	-	-	-	-	-	-	-	-	-	-	-	-	-	-------
500	30	38	46	53	61	68	76	84	91	99	106	114	122	129	137
525	32	40	48	56	64	72	80	88	96	104	112	120	128	136	144
550	33	42	50	58	67	75	84	92	100	109	117	125	134	142	150
575	35	44	52	61	70	79	87	96	105	114	122	131	140	149	157
600	36	46	55	64	73	82	91	100	109	119	128	137	146	155	164
625	38	47	57	66	76	85	95	104	114	123	133	142	152	161	171
650	40	49	59	69	79	89	99	109	119	128	138	148	158	168	178
675	41	51	62	72	82	92	103	113	123	133	144	154	164	174	185
700	43	53	64	74	85	96	106	117	128	138	149	160	170	181	191
750	46	57	68	80	91	103	114	125	137	148	160	171	182	194	205
800	49	61	73	85	97	109	122	134	146	158	170	182	194	207	219
850	52	65	77	90	103	116	129	142	155	168	181	194	207	220	232
900	55	68	82	96	109	123	137	150	164	178	191	205	219	232	246
950	58	72	87	101	115	130	144	159	173	188	202	217	231	245	260
1000	61	76	91	106	122	137	152	167	182	198	213	228	243	258	273
1050	64	80	96	112	128	144	160	175	191	207	223	239	255	271	287
1100	67	84	100	117	134	150	167	184	201	217	234	251	267	284	301
1150	70	87	105	122	140	157	175	192	210	227	245	262	280	297	315
1200	73	91	109	128	146	164	182	201	219	237	255	273	292	310	328
1250	76	95	114	133	152	171	190	209	228	247	266	285	304	323	342
1300	79	99	119	138	158	178	198	217	237	257	277	296	316	336	356
1350	82	103	123	144	164	185	205	226	246	267	287	308	328	349	369
1400	85	106	128	149	170	191	213	234	255	277	298	319	340	362	383
1450	88	110	132	154	176	198	220	242	264	286	308	330	353	375	397
1500	91	114	137	160	182	205	228	251	273	296	319	342	365	387	410
1550	94	118	141	165	188	212	236	259	283	306	330	353	377	400	424
1600	97	122	146	170	194	219	243	267	292	316	340	365	389	413	438
1650	100	125	150	175	201	226	251	276	301	326	351	376	401	426	451
1700	103	129	155	181	207	232	258	284	310	336	362	387	413	439	465
1800	109	137	164	191	219	246	273	301	328	356	383	410	438	465	492
1900	115	144	173	202	231	260	289	318	346	375	404	433	462	491	520
2000	122	152	182	213	243	273	304	334	365	395	425	456	486	517	547
2500	152	190	228	266	304	342	380	418	456	494	532	570	608	646	684
3000	182	228	273	319	365	410	456	501	547	593	638	684	729	775	820
3500	213	266	319	372	425	479	532	585	638	691	745	798	851	904	957
4000	243	304	365	425	486	547	608	669	729	790	851	912	972	1033	1094
5000	304	380	456	532	608	684	760	836	912	988	1064	1140	1216	1292	1367
6000	365	456	547	638	729	820	912	1003	1094	1185	1276	1367	1459	1550	1641
7000	425	532	638	745	851	957	1064	1170	1276	1383	1489	1595	1702	1808	1914
8000	486	608	729	851	972	1094	1216	1337	1459	1580	1702	1823	1945	2066	2188
9000	547	684	820	957	1094	1231	1367	1504	1641	1778	1914	2051	2188	2325	2461
10000	608	760	912	1064	1216	1367	1519	1671	1823	1975	2127	2279	2431	2583	2735

Gear Box...High Gear **RATE CHART KG. PER HA.**

Material Density Cu. M 0.90 Figures in body of chart = mm of door opening

Width.	8	10	12	14	16	18	20	22	24	26	28	30	32	34	36
Rate	-	-	-	-	-	-	-	-	-	-	-	-	-	-	-------
500	29	36	43	50	57	65	72	79	86	93	100	108	115	122	129
525	30	38	45	53	60	68	75	83	90	98	105	113	121	128	136
550	32	39	47	55	63	71	79	87	95	103	110	118	126	134	142
575	33	41	50	58	66	74	83	91	99	107	116	124	132	140	149
600	34	43	52	60	69	77	86	95	103	112	121	129	138	146	155
625	36	45	54	63	72	81	90	99	108	117	126	135	144	152	161
650	37	47	56	65	75	84	93	103	112	121	131	140	149	159	168
675	39	48	58	68	77	87	97	107	116	126	136	145	155	165	174
700	40	50	60	70	80	90	100	110	121	131	141	151	161	171	181
750	43	54	65	75	86	97	108	118	129	140	151	161	172	183	194
800	46	57	69	80	92	103	115	126	138	149	161	172	184	195	207
850	49	61	73	85	98	110	122	134	146	159	171	183	195	207	220
900	52	65	77	90	103	116	129	142	155	168	181	194	207	220	232
950	55	68	82	95	109	123	136	150	164	177	191	204	218	232	245
1000	57	72	86	100	115	129	144	158	172	187	201	215	230	244	258
1050	60	75	90	105	121	136	151	166	181	196	211	226	241	256	271
1100	63	79	95	110	126	142	158	174	189	205	221	237	253	268	284
1150	66	83	99	116	132	149	165	182	198	215	231	248	264	281	297
1200	69	86	103	121	138	155	172	189	207	224	241	258	276	293	310
1250	72	90	108	126	144	161	179	197	215	233	251	269	287	305	323
1300	75	93	112	131	149	168	187	205	224	243	261	280	298	317	336
1350	77	97	116	136	155	174	194	213	232	252	271	291	310	329	349
1400	80	100	121	141	161	181	201	221	241	261	281	301	321	342	362
1450	83	104	125	146	166	187	208	229	250	270	291	312	333	354	375
1500	86	108	129	151	172	194	215	237	258	280	301	323	344	366	387
1550	89	111	133	156	178	200	222	245	267	289	311	334	356	378	400
1600	92	115	138	161	184	207	230	253	276	298	321	344	367	390	413
1650	95	118	142	166	189	213	237	260	284	308	331	355	379	403	426
1700	98	122	146	171	195	220	244	268	293	317	342	366	390	415	439
1800	103	129	155	181	207	232	258	284	310	336	362	387	413	439	465
1900	109	136	164	191	218	245	273	300	327	354	382	409	436	464	491
2000	115	144	172	201	230	258	287	316	344	373	402	431	459	488	517
2500	144	179	215	251	287	323	359	395	431	466	502	538	574	610	646
3000	172	215	258	301	344	387	430	474	517	560	603	646	689	732	775
3500	201	251	301	352	402	452	502	552	603	653	703	753	804	854	904
4000	230	287	344	402	459	517	574	631	689	746	804	861	918	976	1033
5000	287	359	431	502	574	646	718	789	861	933	1005	1076	1148	1220	1291
6000	344	430	517	603	689	775	861	947	1033	1119	1205	1292	1378	1464	1550
7000	402	502	603	703	804	904	1004	1105	1205	1306	1406	1507	1607	1708	1808
8000	459	574	689	804	918	1033	1148	1263	1378	1492	1607	1722	1837	1952	2066
9000	517	646	775	904	1033	1162	1292	1421	1550	1679	1808	1937	2066	2196	2325
10000	574	718	861	1005	1148	1291	1435	1579	1722	1866	2009	2153	2296	2440	2583

Gear Box...High Gear **RATE CHART KG. PER HA.**

Material Density Cu. M 0.95 Figures in body of chart = mm of door opening

Width.	8	10	12	14	16	18	20	22	24	26	28	30	32	34	36
Rate	-	-	-	-	-	-	-	-	-	-	-	-	-	-	-------
500	27	34	41	48	54	61	68	75	82	88	95	102	109	116	122
525	29	36	43	50	57	64	71	79	86	93	100	107	114	121	128
550	30	37	45	52	60	67	75	82	90	97	105	112	120	127	135
575	31	39	47	55	63	70	78	86	94	102	109	117	125	133	141
600	33	41	49	57	65	73	82	90	98	106	114	122	131	139	147
625	34	42	51	59	68	76	85	93	102	110	119	127	136	144	153
650	35	44	53	62	71	80	88	97	106	115	124	133	141	150	159
675	37	46	55	64	73	83	92	101	110	119	128	138	147	156	165
700	38	48	57	67	76	86	95	105	114	124	133	143	152	162	171
750	41	51	61	71	82	92	102	112	122	133	143	153	163	173	184
800	44	54	65	76	87	98	109	120	131	141	152	163	174	185	196
850	46	58	69	81	92	104	116	127	139	150	162	173	185	196	208
900	49	61	73	86	98	110	122	135	147	159	171	184	196	208	220
950	52	65	77	90	103	116	129	142	155	168	181	194	207	220	232
1000	54	68	82	95	109	122	136	150	163	177	190	204	218	231	245
1050	57	71	86	100	114	128	143	157	171	186	200	214	228	243	257
1100	60	75	90	105	120	135	150	164	179	194	209	224	239	254	269
1150	63	78	94	109	125	141	156	172	188	203	219	235	250	266	281
1200	65	82	98	114	131	147	163	179	196	212	228	245	261	277	294
1250	68	85	102	119	136	153	170	187	204	221	238	255	272	289	306
1300	71	88	106	124	141	159	177	194	212	230	247	265	283	300	318
1350	73	92	110	128	147	165	184	202	220	239	257	275	294	312	330
1400	76	95	114	133	152	171	190	209	228	247	266	285	305	324	343
1450	79	99	118	138	158	177	197	217	237	256	276	296	315	335	355
1500	82	102	122	143	163	184	204	224	245	265	285	306	326	347	367
1550	84	105	126	148	169	190	211	232	253	274	295	316	337	358	379
1600	87	109	131	152	174	196	218	239	261	283	305	326	348	370	392
1650	90	112	135	157	179	202	224	247	269	292	314	336	359	381	404
1700	92	116	139	162	185	208	231	254	277	300	324	347	370	393	416
1800	98	122	147	171	196	220	245	269	294	318	343	367	392	416	440
1900	103	129	155	181	207	232	258	284	310	336	362	387	413	439	465
2000	109	136	163	190	218	245	272	299	326	353	381	408	435	462	489
2500	136	170	204	238	272	306	340	374	408	442	476	510	544	578	612
3000	163	204	245	285	326	367	408	449	489	530	571	612	653	693	734
3500	190	238	285	333	381	428	476	523	571	619	666	714	761	809	856
4000	218	272	326	381	435	489	544	598	653	707	761	816	870	924	979
5000	272	340	408	476	544	612	680	748	816	884	952	1020	1088	1156	1224
6000	326	408	489	571	653	734	816	897	979	1060	1142	1224	1305	1387	1468
7000	381	476	571	666	761	856	952	1047	1142	1237	1332	1427	1523	1618	1713
8000	435	544	653	761	870	979	1088	1196	1305	1414	1523	1631	1740	1849	1958
9000	489	612	734	856	979	1101	1224	1346	1468	1591	1713	1835	1958	2080	2202
10000	544	680	816	952	1088	1224	1359	1495	1631	1767	1903	2039	2175	2311	2447

Gear Box...High Gear **RATE CHART KG. PER HA.**

Material Density Cu. M 1.00 Figures in body of chart = mm of door opening

Width.	8	10	12	14	16	18	20	22	24	26	28	30	32	34	36
Rate	-	-	-	-	-	-	-	-	-	-	-	-	-	-	-------
500	26	32	39	45	52	58	65	71	77	84	90	97	103	110	116
525	27	34	41	47	54	61	68	75	81	88	95	102	108	115	122
550	28	36	43	50	57	64	71	78	85	92	99	107	114	121	128
575	30	37	45	52	59	67	74	82	89	97	104	111	119	126	134
600	31	39	46	54	62	70	77	85	93	101	108	116	124	132	139
625	32	40	48	57	65	73	81	89	97	105	113	121	129	137	145
650	34	42	50	59	67	76	84	92	101	109	118	126	134	143	151
675	35	44	52	61	70	78	87	96	105	113	122	131	139	148	157
700	36	45	54	63	72	81	90	99	108	118	127	136	145	154	163
750	39	48	58	68	77	87	97	107	116	126	136	145	155	165	174
800	41	52	62	72	83	93	103	114	124	134	145	155	165	176	186
850	44	55	66	77	88	99	110	121	132	143	154	165	176	187	198
900	46	58	70	81	93	105	116	128	139	151	163	174	186	198	209
950	49	61	74	86	98	110	123	135	147	160	172	184	196	209	221
1000	52	65	77	90	103	116	129	142	155	168	181	194	207	220	232
1050	54	68	81	95	108	122	136	149	163	176	190	203	217	231	244
1100	57	71	85	99	114	128	142	156	170	185	199	213	227	242	256
1150	59	74	89	104	119	134	149	163	178	193	208	223	238	252	267
1200	62	77	93	108	124	139	155	170	186	201	217	232	248	263	279
1250	65	81	97	113	129	145	161	178	194	210	226	242	258	274	291
1300	67	84	101	118	134	151	168	185	201	218	235	252	269	285	302
1350	70	87	105	122	139	157	174	192	209	227	244	262	279	296	314
1400	72	90	108	127	145	163	181	199	217	235	253	271	289	307	325
1450	75	94	112	131	150	169	187	206	225	243	262	281	300	318	337
1500	77	97	116	136	155	174	194	213	232	252	271	291	310	329	349
1550	80	100	120	140	160	180	200	220	240	260	280	300	320	340	360
1600	83	103	124	145	165	186	207	227	248	269	289	310	331	351	372
1650	85	107	128	149	170	192	213	234	256	277	298	320	341	362	384
1700	88	110	132	154	176	198	220	242	263	285	307	329	351	373	395
1800	93	116	139	163	186	209	232	256	279	302	325	349	372	395	418
1900	98	123	147	172	196	221	245	270	294	319	344	368	393	417	442
2000	103	129	155	181	207	232	258	284	310	336	362	387	413	439	465
2500	129	161	194	226	258	291	323	355	387	420	452	484	517	549	581
3000	155	194	232	271	310	349	387	426	465	504	542	581	620	659	697
3500	181	226	271	316	362	407	452	497	542	588	633	678	723	768	814
4000	207	258	310	362	413	465	517	568	620	672	723	775	827	878	930
5000	258	323	387	452	517	581	646	710	775	839	904	969	1033	1098	1162
6000	310	387	465	542	620	697	775	852	930	1007	1085	1162	1240	1317	1395
7000	362	452	542	633	723	814	904	994	1085	1175	1266	1356	1446	1537	1627
8000	413	517	620	723	827	930	1033	1137	1240	1343	1446	1550	1653	1756	1860
9000	465	581	697	814	930	1046	1162	1279	1395	1511	1627	1744	1860	1976	2092
10000	517	646	775	904	1033	1162	1291	1421	1550	1679	1808	1937	2066	2196	2325

Gear Box...High Gear **RATE CHART KG. PER HA.**

Material Density Cu. M 1.05 Figures in body of chart = mm of door opening

Width.	8	10	12	14	16	18	20	22	24	26	28	30	32	34	36
Rate	-	-	-	-	-	-	-	-	-	-	-	-	-	-	------
500	25	31	37	43	49	55	61	68	74	80	86	92	98	105	111
525	26	32	39	45	52	58	65	71	77	84	90	97	103	110	116
550	27	34	41	47	54	61	68	74	81	88	95	101	108	115	122
575	28	35	42	50	57	64	71	78	85	92	99	106	113	120	127
600	30	37	44	52	59	66	74	81	89	96	103	111	118	125	133
625	31	38	46	54	61	69	77	85	92	100	108	115	123	131	138
650	32	40	48	56	64	72	80	88	96	104	112	120	128	136	144
675	33	42	50	58	66	75	83	91	100	108	116	125	133	141	149
700	34	43	52	60	69	77	86	95	103	112	121	129	138	146	155
750	37	46	55	65	74	83	92	101	111	120	129	138	148	157	166
800	39	49	59	69	79	89	98	108	118	128	138	148	157	167	177
850	42	52	63	73	84	94	105	115	125	136	146	157	167	178	188
900	44	55	66	77	89	100	111	122	133	144	155	166	177	188	199
950	47	58	70	82	93	105	117	129	140	152	164	175	187	199	210
1000	49	61	74	86	98	111	123	135	148	160	172	184	197	209	221
1050	52	65	77	90	103	116	129	142	155	168	181	194	207	220	232
1100	54	68	81	95	108	122	135	149	162	176	189	203	216	230	244
1150	57	71	85	99	113	127	141	156	170	184	198	212	226	240	255
1200	59	74	89	103	118	133	148	162	177	192	207	221	236	251	266
1250	61	77	92	108	123	138	154	169	184	200	215	231	246	261	277
1300	64	80	96	112	128	144	160	176	192	208	224	240	256	272	288
1350	66	83	100	116	133	149	166	183	199	216	232	249	266	282	299
1400	69	86	103	121	138	155	172	189	207	224	241	258	276	293	310
1450	71	89	107	125	143	161	178	196	214	232	250	268	285	303	321
1500	74	92	111	129	148	166	184	203	221	240	258	277	295	314	332
1550	76	95	114	133	153	172	191	210	229	248	267	286	305	324	343
1600	79	98	118	138	157	177	197	216	236	256	276	295	315	335	354
1650	81	101	122	142	162	183	203	223	244	264	284	304	325	345	365
1700	84	105	125	146	167	188	209	230	251	272	293	314	335	355	376
1800	89	111	133	155	177	199	221	244	266	288	310	332	354	376	399
1900	93	117	140	164	187	210	234	257	280	304	327	351	374	397	421
2000	98	123	148	172	197	221	246	271	295	320	344	369	394	418	443
2500	123	154	184	215	246	277	307	338	369	400	430	461	492	523	554
3000	148	184	221	258	295	332	369	406	443	480	517	553	590	627	664
3500	172	215	258	301	344	387	430	474	517	560	603	646	689	732	775
4000	197	246	295	344	394	443	492	541	590	640	689	738	787	836	886
5000	246	307	369	430	492	554	615	676	738	799	861	922	984	1046	1107
6000	295	369	443	517	590	664	738	812	886	959	1033	1107	1181	1255	1328
7000	344	430	517	603	689	775	861	947	1033	1119	1205	1291	1378	1464	1550
8000	394	492	590	689	787	886	984	1082	1181	1279	1378	1476	1574	1673	1771
9000	443	553	664	775	886	996	1107	1218	1328	1439	1550	1660	1771	1882	1993
10000	492	615	738	861	984	1107	1230	1353	1476	1599	1722	1845	1968	2091	2214

Gear Box...High Gear **RATE CHART KG. PER HA.**

Material Density Cu. M 1.10 Figures in body of chart = mm of door opening

Width.	8	10	12	14	16	18	20	22	24	26	28	30	32	34	36
Rate	-	-	-	-	-	-	-	-	-	-	-	-	-	-	------
500	No	29	35	41	47	53	59	65	70	76	82	88	94	100	106
525	25	31	37	43	49	55	62	68	74	80	86	92	99	105	111
550	26	32	39	45	52	58	65	71	77	84	90	97	103	110	116
575	27	34	41	47	54	61	68	74	81	88	95	101	108	115	122
600	28	35	42	49	56	63	70	77	85	92	99	106	113	120	127
625	29	37	44	51	59	66	73	81	88	95	103	110	117	125	132
650	31	38	46	53	61	69	76	84	92	99	107	114	122	130	137
675	32	40	48	55	63	71	79	87	95	103	111	119	127	135	143
700	33	41	49	58	66	74	82	90	99	107	115	123	131	140	148
750	35	44	53	62	70	79	88	97	106	114	123	132	141	150	159
800	38	47	56	66	75	85	94	103	113	122	131	141	150	160	169
850	40	50	60	70	80	90	100	110	120	130	140	150	160	170	180
900	42	53	63	74	85	95	106	116	127	137	148	159	169	180	190
950	45	56	67	78	89	100	112	123	134	145	156	167	178	190	201
1000	47	59	70	82	94	106	117	129	141	153	164	176	188	200	211
1050	49	62	74	86	99	111	123	136	148	160	173	185	197	210	222
1100	52	65	77	90	103	116	129	142	155	168	181	194	207	220	232
1150	54	68	81	95	108	122	135	149	162	176	189	203	216	230	243
1200	56	70	85	99	113	127	141	155	169	183	197	211	225	240	254
1250	59	73	88	103	117	132	147	161	176	191	205	220	235	249	264
1300	61	76	92	107	122	137	153	168	183	198	214	229	244	259	275
1350	63	79	95	111	127	143	159	174	190	206	222	238	254	269	285
1400	66	82	99	115	131	148	164	181	197	214	230	247	263	279	296
1450	68	85	102	119	136	153	170	187	204	221	238	255	272	289	306
1500	70	88	106	123	141	159	176	194	211	229	247	264	282	299	317
1550	73	91	109	127	146	164	182	200	218	237	255	273	291	309	328
1600	75	94	113	131	150	169	188	207	225	244	263	282	301	319	338
1650	77	97	116	136	155	174	194	213	232	252	271	291	310	329	349
1700	80	100	120	140	160	180	200	220	240	259	279	299	319	339	359
1800	85	106	127	148	169	190	211	232	254	275	296	317	338	359	380
1900	89	112	134	156	178	201	223	245	268	290	312	335	357	379	402
2000	94	117	141	164	188	211	235	258	282	305	329	352	376	399	423
2500	117	147	176	205	235	264	294	323	352	382	411	440	470	499	528
3000	141	176	211	247	282	317	352	387	423	458	493	528	564	599	634
3500	164	205	247	288	329	370	411	452	493	534	575	616	657	699	740
4000	188	235	282	329	376	423	470	517	564	611	657	704	751	798	845
5000	235	294	352	411	470	528	587	646	704	763	822	881	939	998	1057
6000	282	352	423	493	564	634	704	775	845	916	986	1057	1127	1198	1268
7000	329	411	493	575	657	740	822	904	986	1068	1151	1233	1315	1397	1479
8000	376	470	564	657	751	845	939	1033	1127	1221	1315	1409	1503	1597	1691
9000	423	528	634	740	845	951	1057	1162	1268	1374	1479	1585	1691	1796	1902
10000	470	587	704	822	939	1057	1174	1291	1409	1526	1644	1761	1879	1996	2113

Gear Box...High Gear **RATE CHART KG. PER HA.**

Material Density Cu. M 1.15 Figures in body of chart = mm of door opening

Width.	8	10	12	14	16	18	20	22	24	26	28	30	32	34	36
Rate	-	-	-	-	-	-	-	-	-	-	-	-	-	-	-------
500	No	28	34	39	45	51	56	62	67	73	79	84	90	95	101
525	No	29	35	41	47	53	59	65	71	77	83	88	94	100	106
550	25	31	37	43	49	56	62	68	74	80	86	93	99	105	111
575	26	32	39	45	52	58	65	71	77	84	90	97	103	110	116
600	27	34	40	47	54	61	67	74	81	88	94	101	108	115	121
625	28	35	42	49	56	63	70	77	84	91	98	105	112	119	126
650	29	36	44	51	58	66	73	80	88	95	102	109	117	124	131
675	30	38	45	53	61	68	76	83	91	99	106	114	121	129	136
700	31	39	47	55	63	71	79	86	94	102	110	118	126	134	142
750	34	42	51	59	67	76	84	93	101	109	118	126	135	143	152
800	36	45	54	63	72	81	90	99	108	117	126	135	144	153	162
850	38	48	57	67	76	86	95	105	115	124	134	143	153	162	172
900	40	51	61	71	81	91	101	111	121	131	142	152	162	172	182
950	43	53	64	75	85	96	107	117	128	139	149	160	171	181	192
1000	45	56	67	79	90	101	112	124	135	146	157	168	180	191	202
1050	47	59	71	83	94	106	118	130	142	153	165	177	189	200	212
1100	49	62	74	86	99	111	124	136	148	161	173	185	198	210	222
1150	52	65	77	90	103	116	129	142	155	168	181	194	207	220	232
1200	54	67	81	94	108	121	135	148	162	175	189	202	216	229	243
1250	56	70	84	98	112	126	140	154	168	182	197	211	225	239	253
1300	58	73	88	102	117	131	146	161	175	190	204	219	234	248	263
1350	61	76	91	106	121	136	152	167	182	197	212	227	243	258	273
1400	63	79	94	110	126	142	157	173	189	204	220	236	252	267	283
1450	65	81	98	114	130	147	163	179	195	212	228	244	261	277	293
1500	67	84	101	118	135	152	168	185	202	219	236	253	270	286	303
1550	70	87	104	122	139	157	174	191	209	226	244	261	279	296	313
1600	72	90	108	126	144	162	180	198	216	234	252	270	287	305	323
1650	74	93	111	130	148	167	185	204	222	241	259	278	296	315	334
1700	76	95	115	134	153	172	191	210	229	248	267	286	305	325	344
1800	81	101	121	142	162	182	202	222	243	263	283	303	323	344	364
1900	85	107	128	149	171	192	213	235	256	277	299	320	341	363	384
2000	90	112	135	157	180	202	225	247	270	292	314	337	359	382	404
2500	112	140	168	197	225	253	281	309	337	365	393	421	449	477	505
3000	135	168	202	236	270	303	337	371	404	438	472	505	539	573	606
3500	157	197	236	275	314	354	393	432	472	511	550	590	629	668	708
4000	180	225	270	314	359	404	449	494	539	584	629	674	719	764	809
5000	225	281	337	393	449	505	562	618	674	730	786	842	898	955	1011
6000	270	337	404	472	539	606	674	741	809	876	943	1011	1078	1146	1213
7000	314	393	472	550	629	708	786	865	943	1022	1101	1179	1258	1336	1415
8000	359	449	539	629	719	809	898	988	1078	1168	1258	1348	1437	1527	1617
9000	404	505	606	708	809	910	1011	1112	1213	1314	1415	1516	1617	1718	1819
10000	449	562	674	786	898	1011	1123	1235	1348	1460	1572	1685	1797	1909	2021

Gear Box...High Gear **RATE CHART KG. PER HA.**

Material Density Cu. M 1.20 Figures in body of chart = mm of door opening

Width.	8	10	12	14	16	18	20	22	24	26	28	30	32	34	36
Rate	-	-	-	-	-	-	-	-	-	-	-	-	-	-	-------
500	No	27	32	38	43	48	54	59	65	70	75	81	86	91	97
525	No	28	34	40	45	51	57	62	68	73	79	85	90	96	102
550	No	30	36	41	47	53	59	65	71	77	83	89	95	101	107
575	25	31	37	43	50	56	62	68	74	80	87	93	99	105	111
600	26	32	39	45	52	58	65	71	77	84	90	97	103	110	116
625	27	34	40	47	54	61	67	74	81	87	94	101	108	114	121
650	28	35	42	49	56	63	70	77	84	91	98	105	112	119	126
675	29	36	44	51	58	65	73	80	87	94	102	109	116	123	131
700	30	38	45	53	60	68	75	83	90	98	105	113	121	128	136
750	32	40	48	57	65	73	81	89	97	105	113	121	129	137	145
800	34	43	52	60	69	77	86	95	103	112	121	129	138	146	155
850	37	46	55	64	73	82	91	101	110	119	128	137	146	156	165
900	39	48	58	68	77	87	97	107	116	126	136	145	155	165	174
950	41	51	61	72	82	92	102	112	123	133	143	153	164	174	184
1000	43	54	65	75	86	97	108	118	129	140	151	161	172	183	194
1050	45	57	68	79	90	102	113	124	136	147	158	170	181	192	203
1100	47	59	71	83	95	107	118	130	142	154	166	178	189	201	213
1150	50	62	74	87	99	111	124	136	149	161	173	186	198	210	223
1200	52	65	77	90	103	116	129	142	155	168	181	194	207	220	232
1250	54	67	81	94	108	121	135	148	161	175	188	202	215	229	242
1300	56	70	84	98	112	126	140	154	168	182	196	210	224	238	252
1350	58	73	87	102	116	131	145	160	174	189	203	218	232	247	262
1400	60	75	90	105	121	136	151	166	181	196	211	226	241	256	271
1450	62	78	94	109	125	140	156	172	187	203	218	234	250	265	281
1500	65	81	97	113	129	145	161	178	194	210	226	242	258	274	291
1550	67	83	100	117	133	150	167	184	200	217	234	250	267	284	300
1600	69	86	103	121	138	155	172	189	207	224	241	258	276	293	310
1650	71	89	107	124	142	160	178	195	213	231	249	266	284	302	320
1700	73	91	110	128	146	165	183	201	220	238	256	274	293	311	329
1800	77	97	116	136	155	174	194	213	232	252	271	291	310	329	349
1900	82	102	123	143	164	184	204	225	245	266	286	307	327	348	368
2000	86	108	129	151	172	194	215	237	258	280	301	323	344	366	387
2500	108	135	161	188	215	242	269	296	323	350	377	404	431	457	484
3000	129	161	194	226	258	291	323	355	387	420	452	484	517	549	581
3500	151	188	226	264	301	339	377	414	452	490	527	565	603	640	678
4000	172	215	258	301	344	387	431	474	517	560	603	646	689	732	775
5000	215	269	323	377	431	484	538	592	646	700	753	807	861	915	969
6000	258	323	387	452	517	581	646	710	775	839	904	969	1033	1098	1162
7000	301	377	452	527	603	678	753	829	904	979	1055	1130	1205	1281	1356
8000	344	431	517	603	689	775	861	947	1033	1119	1205	1291	1378	1464	1550
9000	387	484	581	678	775	872	969	1065	1162	1259	1356	1453	1550	1647	1744
10000	431	538	646	753	861	969	1076	1184	1291	1399	1507	1614	1722	1830	1937

Gear Box...High Gear **RATE CHART KG. PER HA.**

Material Density Cu. M 1.30 Figures in body of chart = mm of door opening

Width.	8	10	12	14	16	18	20	22	24	26	28	30	32	34	36
Rate	-	-	-	-	-	-	-	-	-	-	-	-	-	-	-------
500	No	25	30	35	40	45	50	55	60	65	70	75	79	84	89
525	No	26	31	37	42	47	52	57	63	68	73	78	83	89	94
550	No	27	33	38	44	49	55	60	66	71	76	82	87	93	98
575	No	29	34	40	46	51	57	63	69	74	80	86	91	97	103
600	No	30	36	42	48	54	60	66	72	77	83	89	95	101	107
625	25	31	37	43	50	56	62	68	75	81	87	93	99	106	112
650	26	32	39	45	52	58	65	71	77	84	90	97	103	110	116
675	27	34	40	47	54	60	67	74	80	87	94	101	107	114	121
700	28	35	42	49	56	63	70	76	83	90	97	104	111	118	125
750	30	37	45	52	60	67	75	82	89	97	104	112	119	127	134
800	32	40	48	56	64	72	79	87	95	103	111	119	127	135	143
850	34	42	51	59	68	76	84	93	101	110	118	127	135	144	152
900	36	45	54	63	72	80	89	98	107	116	125	134	143	152	161
950	38	47	57	66	76	85	94	104	113	123	132	142	151	160	170
1000	40	50	60	70	79	89	99	109	119	129	139	149	159	169	179
1050	42	52	63	73	83	94	104	115	125	136	146	156	167	177	188
1100	44	55	66	76	87	98	109	120	131	142	153	164	175	186	197
1150	46	57	69	80	91	103	114	126	137	149	160	171	183	194	206
1200	48	60	72	83	95	107	119	131	143	155	167	179	191	203	215
1250	50	62	75	87	99	112	124	137	149	161	174	186	199	211	224
1300	52	65	77	90	103	116	129	142	155	168	181	194	207	220	232
1350	54	67	80	94	107	121	134	148	161	174	188	201	215	228	241
1400	56	70	83	97	111	125	139	153	167	181	195	209	223	236	250
1450	58	72	86	101	115	130	144	158	173	187	202	216	230	245	259
1500	60	75	89	104	119	134	149	164	179	194	209	224	238	253	268
1550	62	77	92	108	123	139	154	169	185	200	216	231	246	262	277
1600	64	79	95	111	127	143	159	175	191	207	223	238	254	270	286
1650	66	82	98	115	131	148	164	180	197	213	229	246	262	279	295
1700	68	84	101	118	135	152	169	186	203	220	236	253	270	287	304
1800	72	89	107	125	143	161	179	197	215	232	250	268	286	304	322
1900	76	94	113	132	151	170	189	208	227	245	264	283	302	321	340
2000	79	99	119	139	159	179	199	219	238	258	278	298	318	338	358
2500	99	124	149	174	199	224	248	273	298	323	348	373	397	422	447
3000	119	149	179	209	238	268	298	328	358	387	417	447	477	507	536
3500	139	174	209	243	278	313	348	382	417	452	487	522	556	591	626
4000	159	199	238	278	318	358	397	437	477	517	556	596	636	676	715
5000	199	248	298	348	397	447	497	546	596	646	695	745	795	844	894
6000	238	298	358	417	477	536	596	656	715	775	835	894	954	1013	1073
7000	278	348	417	487	556	626	695	765	835	904	974	1043	1113	1182	1252
8000	318	397	477	556	636	715	795	874	954	1033	1113	1192	1272	1351	1431
9000	358	447	536	626	715	805	894	984	1073	1162	1252	1341	1431	1520	1609
10000	397	497	596	695	795	894	993	1093	1192	1291	1391	1490	1590	1689	1788

Gear Box...High Gear **RATE CHART KG. PER HA.**

Material Density Cu. M 1.40 Figures in body of chart = mm of door opening

Width.	8	10	12	14	16	18	20	22	24	26	28	30	32	34	36
Rate	-	-	-	-	-	-	-	-	-	-	-	-	-	-	-------
500	No	No	28	32	37	42	46	51	55	60	65	69	74	78	83
525	No	24	29	34	39	44	48	53	58	63	68	73	77	82	87
550	No	25	30	36	41	46	51	56	61	66	71	76	81	86	91
575	No	27	32	37	42	48	53	58	64	69	74	80	85	90	95
600	No	28	33	39	44	50	55	61	66	72	77	83	89	94	100
625	No	29	35	40	46	52	58	63	69	75	81	86	92	98	104
650	No	30	36	42	48	54	60	66	72	78	84	90	96	102	108
675	25	31	37	44	50	56	62	68	75	81	87	93	100	106	112
700	26	32	39	45	52	58	65	71	77	84	90	97	103	110	116
750	28	35	42	48	55	62	69	76	83	90	97	104	111	118	125
800	30	37	44	52	59	66	74	81	89	96	103	111	118	125	133
850	31	39	47	55	63	71	78	86	94	102	110	118	125	133	141
900	33	42	50	58	66	75	83	91	100	108	116	125	133	141	149
950	35	44	53	61	70	79	88	96	105	114	123	131	140	149	158
1000	37	46	55	65	74	83	92	101	111	120	129	138	148	157	166
1050	39	48	58	68	77	87	97	107	116	126	136	145	155	165	174
1100	41	51	61	71	81	91	101	112	122	132	142	152	162	173	183
1150	42	53	64	74	85	95	106	117	127	138	149	159	170	180	191
1200	44	55	66	77	89	100	111	122	133	144	155	166	177	188	199
1250	46	58	69	81	92	104	115	127	138	150	161	173	185	196	208
1300	48	60	72	84	96	108	120	132	144	156	168	180	192	204	216
1350	50	62	75	87	100	112	125	137	149	162	174	187	199	212	224
1400	52	65	77	90	103	116	129	142	155	168	181	194	207	220	232
1450	54	67	80	94	107	120	134	147	161	174	187	201	214	227	241
1500	55	69	83	97	111	125	138	152	166	180	194	208	221	235	249
1550	57	71	86	100	114	129	143	157	172	186	200	214	229	243	257
1600	59	74	89	103	118	133	148	162	177	192	207	221	236	251	266
1650	61	76	91	107	122	137	152	167	183	198	213	228	244	259	274
1700	63	78	94	110	125	141	157	173	188	204	220	235	251	267	282
1800	66	83	100	116	133	149	166	183	199	216	232	249	266	282	299
1900	70	88	105	123	140	158	175	193	210	228	245	263	280	298	315
2000	74	92	111	129	148	166	185	203	221	240	258	277	295	314	332
2500	92	115	138	161	185	208	231	254	277	300	323	346	369	392	415
3000	111	138	166	194	221	249	277	304	332	360	387	415	443	470	498
3500	129	161	194	226	258	291	323	355	387	420	452	484	517	549	581
4000	148	185	221	258	295	332	369	406	443	480	517	554	590	627	664
5000	185	231	277	323	369	415	461	507	554	600	646	692	738	784	830
6000	221	277	332	387	443	498	554	609	664	720	775	830	886	941	996
7000	258	323	387	452	517	581	646	710	775	839	904	969	1033	1098	1162
8000	295	369	443	517	590	664	738	812	886	959	1033	1107	1181	1255	1328
9000	332	415	498	581	664	747	830	913	996	1079	1162	1245	1328	1411	1494
10000	369	461	554	646	738	830	923	1015	1107	1199	1292	1384	1476	1568	1661

Gear Box...High Gear **RATE CHART KG. PER HA.**

Material Density Cu. M 1.50 Figures in body of chart = mm of door opening

Width.	8	10	12	14	16	18	20	22	24	26	28	30	32	34	36
Rate	-	-	-	-	-	-	-	-	-	-	-	-	-	-	-------
500	No	No	26	30	34	39	43	47	52	56	60	65	69	73	77
525	No	No	27	32	36	41	45	50	54	59	63	68	72	77	81
550	No	No	28	33	38	43	47	52	57	62	66	71	76	81	85
575	No	25	30	35	40	45	50	54	59	64	69	74	79	84	89
600	No	26	31	36	41	46	52	57	62	67	72	77	83	88	93
625	No	27	32	38	43	48	54	59	65	70	75	81	86	91	97
650	No	28	34	39	45	50	56	62	67	73	78	84	90	95	101
675	No	29	35	41	46	52	58	64	70	76	81	87	93	99	105
700	24	30	36	42	48	54	60	66	72	78	84	90	96	102	108
750	26	32	39	45	52	58	65	71	77	84	90	97	103	110	116
800	28	34	41	48	55	62	69	76	83	90	96	103	110	117	124
850	29	37	44	51	59	66	73	81	88	95	102	110	117	124	132
900	31	39	46	54	62	70	77	85	93	101	108	116	124	132	139
950	33	41	49	57	65	74	82	90	98	106	115	123	131	139	147
1000	34	43	52	60	69	77	86	95	103	112	121	129	138	146	155
1050	36	45	54	63	72	81	90	99	108	118	127	136	145	154	163
1100	38	47	57	66	76	85	95	104	114	123	133	142	152	161	170
1150	40	50	59	69	79	89	99	109	119	129	139	149	158	168	178
1200	41	52	62	72	83	93	103	114	124	134	145	155	165	176	186
1250	43	54	65	75	86	97	108	118	129	140	151	161	172	183	194
1300	45	56	67	78	90	101	112	123	134	146	157	168	179	190	201
1350	46	58	70	81	93	105	116	128	139	151	163	174	186	198	209
1400	48	60	72	84	96	108	121	133	145	157	169	181	193	205	217
1450	50	62	75	87	100	112	125	137	150	162	175	187	200	212	225
1500	52	65	77	90	103	116	129	142	155	168	181	194	207	220	232
1550	53	67	80	93	107	120	133	147	160	173	187	200	214	227	240
1600	55	69	83	96	110	124	138	152	165	179	193	207	220	234	248
1650	57	71	85	99	114	128	142	156	170	185	199	213	227	242	256
1700	59	73	88	102	117	132	146	161	176	190	205	220	234	249	263
1800	62	77	93	108	124	139	155	170	186	201	217	232	248	263	279
1900	65	82	98	115	131	147	164	180	196	213	229	245	262	278	294
2000	69	86	103	121	138	155	172	189	207	224	241	258	276	293	310
2500	86	108	129	151	172	194	215	237	258	280	301	323	344	366	387
3000	103	129	155	181	207	232	258	284	310	336	362	387	413	439	465
3500	121	151	181	211	241	271	301	331	362	392	422	452	482	512	542
4000	138	172	207	241	276	310	344	379	413	448	482	517	551	585	620
5000	172	215	258	301	344	387	431	474	517	560	603	646	689	732	775
6000	207	258	310	362	413	465	517	568	620	672	723	775	827	878	930
7000	241	301	362	422	482	542	603	663	723	784	844	904	964	1025	1085
8000	276	344	413	482	551	620	689	758	827	895	964	1033	1102	1171	1240
9000	310	387	465	542	620	697	775	852	930	1007	1085	1162	1240	1317	1395
10000	344	431	517	603	689	775	861	947	1033	1119	1205	1292	1378	1464	1550

Gear Box...High Gear **RATE CHART KG. PER HA.**

Material Density Cu. M 1.60 Figures in body of chart = mm of door opening

Width.	8	10	12	14	16	18	20	22	24	26	28	30	32	34	36
Rate	-	-	-	-	-	-	-	-	-	-	-	-	-	-	-------
500	No	No	24	28	32	36	40	44	48	52	57	61	65	69	73
525	No	No	25	30	34	38	42	47	51	55	59	64	68	72	76
550	No	No	27	31	36	40	44	49	53	58	62	67	71	75	80
575	No	No	28	32	37	42	46	51	56	60	65	70	74	79	84
600	No	24	29	34	39	44	48	53	58	63	68	73	77	82	87
625	No	25	30	35	40	45	50	55	61	66	71	76	81	86	91
650	No	26	31	37	42	47	52	58	63	68	73	79	84	89	94
675	No	27	33	38	44	49	54	60	65	71	76	82	87	93	98
700	No	28	34	40	45	51	57	62	68	73	79	85	90	96	102
750	24	30	36	42	48	54	61	67	73	79	85	91	97	103	109
800	26	32	39	45	52	58	65	71	77	84	90	97	103	110	116
850	27	34	41	48	55	62	69	75	82	89	96	103	110	117	123
900	29	36	44	51	58	65	73	80	87	94	102	109	116	123	131
950	31	38	46	54	61	69	77	84	92	100	107	115	123	130	138
1000	32	40	48	57	65	73	81	89	97	105	113	121	129	137	145
1050	34	42	51	59	68	76	85	93	102	110	119	127	136	144	153
1100	36	44	53	62	71	80	89	98	107	115	124	133	142	151	160
1150	37	46	56	65	74	84	93	102	111	121	130	139	149	158	167
1200	39	48	58	68	77	87	97	107	116	126	136	145	155	165	174
1250	40	50	61	71	81	91	101	111	121	131	141	151	161	172	182
1300	42	52	63	73	84	94	105	115	126	136	147	157	168	178	189
1350	44	54	65	76	87	98	109	120	131	142	153	163	174	185	196
1400	45	57	68	79	90	102	113	124	136	147	158	170	181	192	203
1450	47	59	70	82	94	105	117	129	140	152	164	176	187	199	211
1500	48	61	73	85	97	109	121	133	145	157	170	182	194	206	218
1550	50	63	75	88	100	113	125	138	150	163	175	188	200	213	225
1600	52	65	77	90	103	116	129	142	155	168	181	194	207	220	232
1650	53	67	80	93	107	120	133	147	160	173	186	200	213	226	240
1700	55	69	82	96	110	123	137	151	165	178	192	206	220	233	247
1800	58	73	87	102	116	131	145	160	174	189	203	218	232	247	262
1900	61	77	92	107	123	138	153	169	184	199	215	230	245	261	276
2000	65	81	97	113	129	145	161	178	194	210	226	242	258	274	291
2500	81	101	121	141	161	182	202	222	242	262	283	303	323	343	363
3000	97	121	145	170	194	218	242	266	291	315	339	363	387	412	436
3500	113	141	170	198	226	254	283	311	339	367	396	424	452	480	509
4000	129	161	194	226	258	291	323	355	387	420	452	484	517	549	581
5000	161	202	242	283	323	363	404	444	484	525	565	605	646	686	726
6000	194	242	291	339	387	436	484	533	581	630	678	726	775	823	872
7000	226	283	339	396	452	509	565	622	678	735	791	848	904	961	1017
8000	258	323	387	452	517	581	646	710	775	839	904	969	1033	1098	1162
9000	291	363	436	509	581	654	726	799	872	944	1017	1090	1162	1235	1308
10000	323	404	484	565	646	726	807	888	969	1049	1130	1211	1291	1372	1453